GUILD ◆ EDITION

Woodsmith®

Woodsmith.com

Vol. 37 / No. 220

SHOP-BUILT SANDING SOLUTION FOR YOUR LATHE

Also:

Efficient Routing in the Workshop

Simple Solutions for Sharpening

Quick & Easy Table Saw Setups

5 New Woodworking Projects Inside

A Publication of August Home Publishing

Woodsmith®

PUBLISHER Donald B. Peschke

EDITORIAL MEDIA DIRECTOR Bryan Nelson
MANAGING EDITOR Vincent Ancona
SENIOR EDITORS Wyatt Myers, Phil Huber, Randall A. Maxey
ASSISTANT EDITOR Robert Kemp

EXECUTIVE ART DIRECTOR Todd Lambirth
SENIOR ILLUSTRATORS Harlan V. Clark, Dirk Ver Steeg, Peter J. Larson
SENIOR GRAPHIC DESIGNER Bob Zimmerman
GRAPHIC DESIGNER Becky Kralicek

CREATIVE DIRECTOR Ted Kralicek
ASSISTANT DESIGN DIRECTOR Chris Fitch
PROJECT DESIGNER/BUILDER John Doyle
CAD SPECIALIST Steve Johnson
SHOP CRAFTSMAN Dana Myers

SENIOR PHOTOGRAPHERS Crayola England, Dennis Kennedy
ASSOCIATE STYLE DIRECTOR Rebecca Cunningham
SENIOR ELECTRONIC IMAGE SPECIALIST Allan Ruhnke
PRODUCTION ASSISTANT Minniette Johnson
VIDEO EDITOR/DIRECTOR Mark Hayes

Woodsmith® (ISSN 0164-4114) is published bimonthly by August Home Publishing Company, 2200 Grand Ave, Des Moines, IA 50312.
Woodsmith® is a registered trademark of August Home Publishing.
Copyright© 2015 August Home Publishing Company. All rights reserved.
Subscriptions: Single copy: $6.95.
Canadian Subscriptions: Canada Post Agreement No. 40038201. Send change of address information to PO Box 881, Station Main, Markham, ON L3P 8M6. Canada BN 84597 5473 RT
Periodicals Postage Paid at Des Moines, IA, and at additional offices.
Postmaster: Send change of address to *Woodsmith*, Box 37106, Boone, IA 50037-0106.

WoodsmithCustomerService.com

ONLINE SUBSCRIBER SERVICES

- **VIEW** your account information
- **RENEW** your subscription
- **CHECK** on a subscription payment
- **PAY** your bill
- **CHANGE** your mailing or e-mail address
- **VIEW/RENEW** your gift subscriptions
- **TELL US** if you've missed an issue

CUSTOMER SERVICE Phone: 800-333-5075 weekdays

SUBSCRIPTIONS
Customer Service
P.O. Box 842
Des Moines, IA 50304-9961
subscriptions@augusthome.com

EDITORIAL
Woodsmith Magazine
2200 Grand Avenue
Des Moines, IA 50312
woodsmith@woodsmith.com

AUGUST HOME PUBLISHING COMPANY

Printed in U.S.A.

from the editor

Sawdust

Sometimes I find it hard to know where to start — whether it's a new project or reading a magazine I've just picked up. And that's the case with this issue. There are so many great projects, tips, and techniques on the following pages, I'm guessing you'll have trouble deciding where to begin, too. For starters, we're featuring five projects. From a small box with metal inlay in the lid to a console designed for today's large flat-screen TVs.

Of the other three projects, the one I've added to my to-do list is the lathe-driven belt sander on page 30. I have a mini-lathe that sees a fair amount of use, but being able to get even more use out of it is too hard to resist. And doing that without really taking up any additional space is even better. The sander mounts securely to the bed of the lathe. The head and tail stocks support the drive roller while the lathe motor provides the power. It's a cool solution to add some powered sanding capability to your shop without spending a lot of money.

Another shop project to take a look at is our add-on bench (page 20). You may be asking, why would I need a bench for my bench? While most workbenches are just fine for the majority of shop tasks, there are times when you need an extra hand. This benchtop bench provides different clamping options and elevates your work for easier access and comfort. The bench doesn't require much in time or materials to build. And ordinary bar clamps are all you need to secure any workpiece. The end result is a must-have problem-solver.

If you enjoy detail work, check out the lid for the small box on page 16. The metal inlay used in the lid is a great way to take any small project from something ordinary to extraordinary. All you need for success is some thin sheet metal, a small router and straight bit, and a little time.

As always, there are tips, techniques, and department articles to help make you a better woodworker. You'll find essentials like edging plywood (page 60) and setting up your table saw quickly and easily (page 62). Plus, there's some interesting information on the types of sharpening systems the guys around here use in their own shops (page 56) and the basic maintenance you need to know to keep your bench vise working just right (page 54). Okay, maybe it doesn't really matter where you start after all.

Bryan

contents

No. 220 August/September 2015

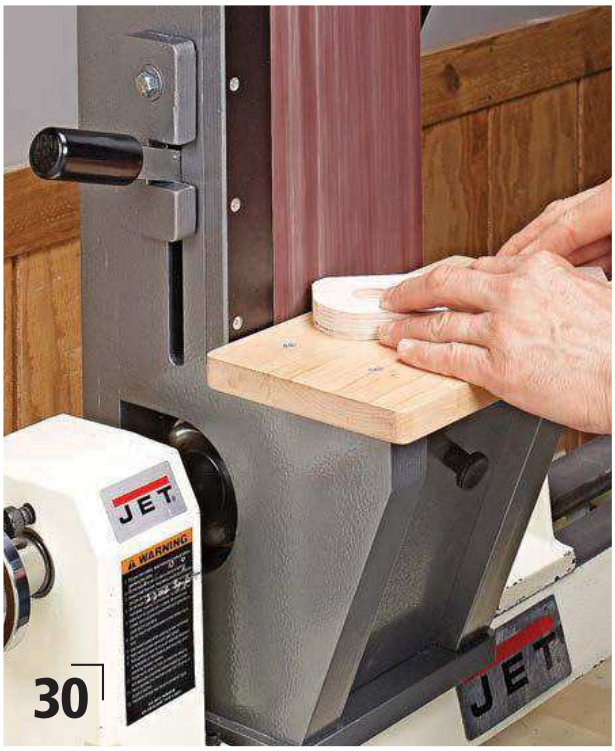

Projects

weekend project

Decorative Inlay Box. 16

Learn how to dress up a small box with metal inlay. The technique is easy to master and it's a great way to add a special touch to your next small project.

shop project

Versatile Add-On Bench 20

This small bench has big-time features. Mounted to a standard workbench, it offers multiple clamping options and secures a workpiece at a more comfortable working height.

designer project

Cherry Footboard Bench. 24

You'll find that quick and easy woodworking techniques are all you need to build this stylish, end-of-the-bed bench. It would be a great addition to a entryway, as well.

shop project

Lathe-Driven Belt Sander 30

Looking for a sanding station for your shop? Well, check out this handy belt sander accessory. It's a simple solution to get more our of your shop lathe.

heirloom project

Louvered-Door TV Console 40

The louvered doors of this cabinet give it a distinct look, but you'll soon realize that providing a home for your TV along with added storage makes it a must-have addition.

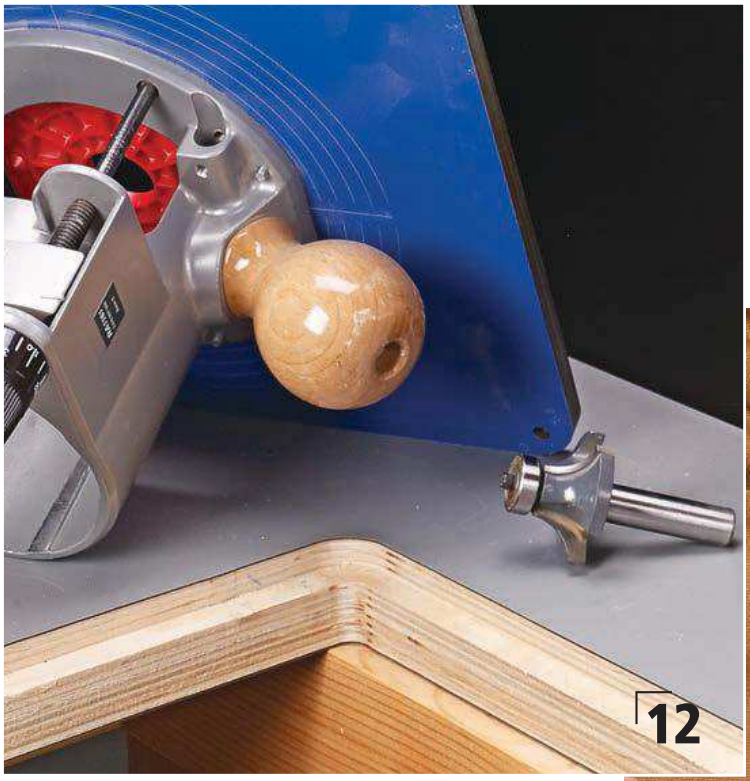

Departments

from our readers
Tips & Techniques 5

all about
Choosing & Using Lacquer. 10

router workshop
Best Routers for Tables. 12

great gear
Air Hose Reels for Your Shop . . . 14

woodworking technique
Working with Metal Inlay 52

working with tools
Bench Vise Maintenance 54

in the shop
Sharpening Solutions 56

woodworking essentials
Basics of Edging Plywood 60

mastering the table saw
Low-Tech Setup Tricks. 62

tips from our shop
Shop Notes. 64

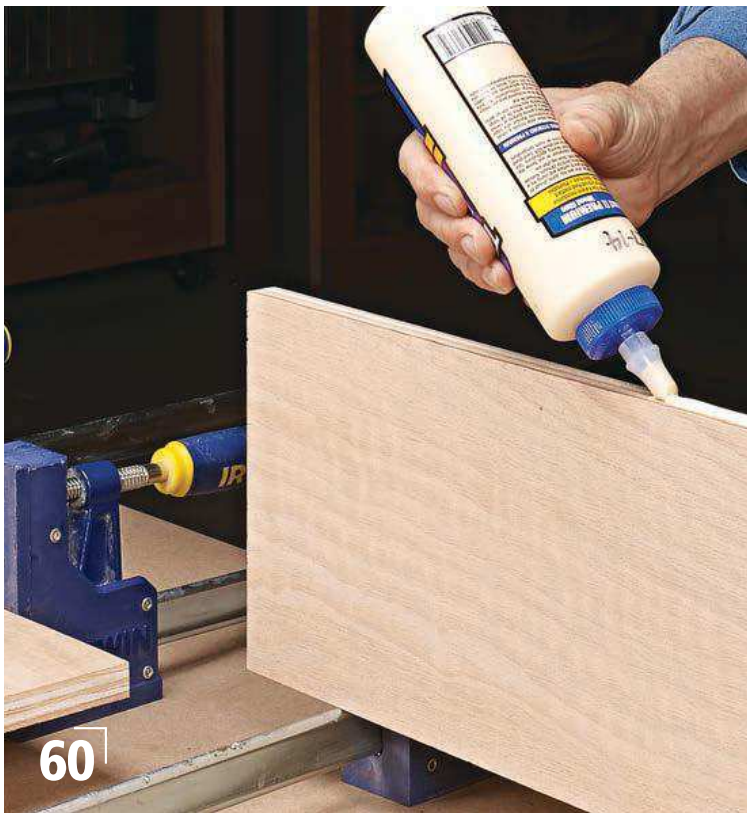

from our readers

Tips & Techniques

Five-Minute Miter Box

When cutting miters on small strips of molding or glass stop, a power miter saw is really overkill. It tends to splinter the wood and can turn those tiny pieces into dangerous projectiles. To avoid this problem, I made my own small-piece miter box and used a hand saw to cut the miters (photo, right).

The miter box is simply a 1"-thick piece of scrap lumber with a groove cut down the center to hold the molding strip. The groove is a bit deeper than the thickness of the strip. This way, the strip rests below the surface of the box, keeping the saw aligned as you begin cutting. And since this miter box is so simple and inexpensive to build, it's easy make several customized boxes as you need them for different sizes of glass stop and molding.

The box has two opposing 45° kerfs to cut both ends of the strip. To make these kerfs, mark their locations with a combination square. Then tape a mitered guide block (also made from a piece of scrap lumber) on the cut line with double-sided tape and cut the kerfs with a pull saw, as shown in the photo at right.

When cutting the miters, the idea is to end up with a strip slightly longer (about 1/32") than needed. You can then use a block plane or sanding block to fine-tune them to final size.

Ryan Brandt
Ogden, Utah

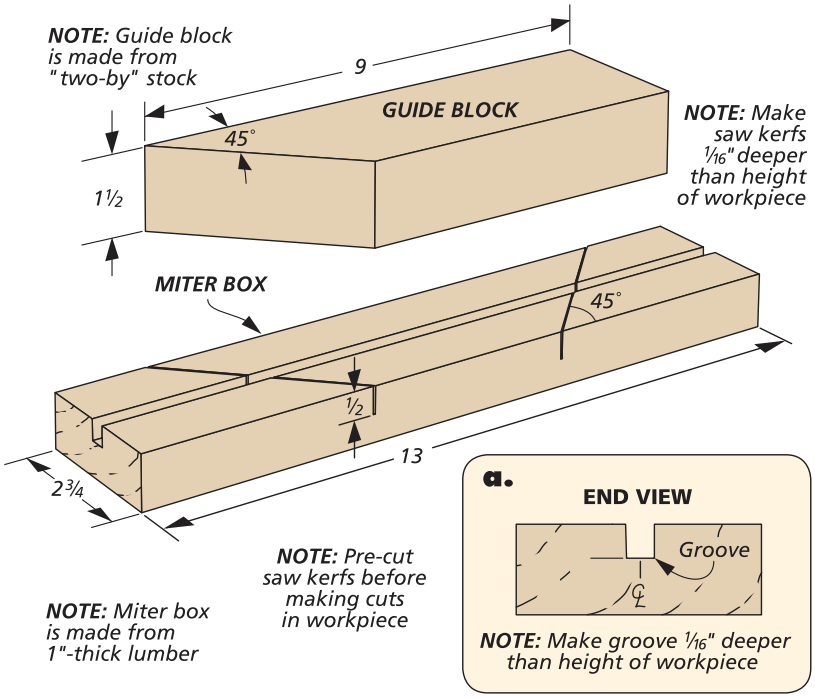

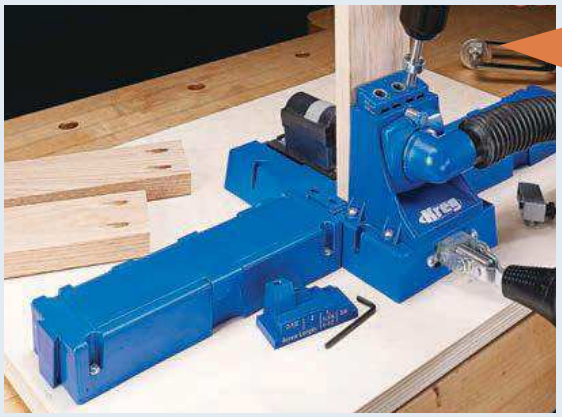

Win This Kreg K5 Jig

Simply send us your favorite shop tips. If your tip or technique is selected as the featured reader's tip, you'll win a *Kreg K5 Jig* just like the one shown here. To submit your tip or technique, just go online to *Woodsmith.com* and click on the link, "SUBMIT A TIP." There you can submit your tip and upload your photos for consideration.

The Winner!

Congratulations to Butch Stutes, the winner of this *Kreg K5 Jig*. To find out how you can win this jig, check out the information at left.

Cutting Thick Parts

I recently made a new workbench for my shop. The top consisted of several layers of MDF. After gluing the MDF panels together, I was faced with the task of trimming the ends to length. The benchtop was too big and heavy to run through the table saw. And it was too thick to make the cuts in one pass with a circular saw. Instead, I used this three-step process using my circular saw and router with a flush-trim bit installed.

THE PROCESS. Using a straightedge, I set the circular saw for its deepest cut. I then made the first cut to final length (Figure 1). Now, simply flip the workpiece over and reposition the straightedge so that the second cut is slightly longer than, but just overlaps, the first cut (Figure 2).

With your router, set a flush-trim bit so that the bearing rides against the cut you made on the first pass (Figure 3). This will leave a perfectly smooth edge.

Wade Meyer
Johnstown, PA

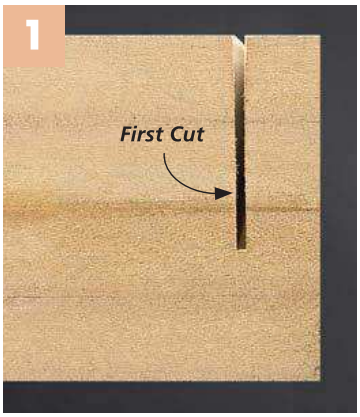

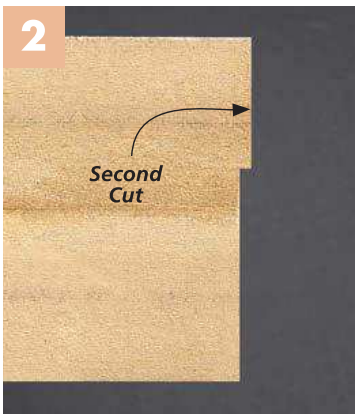

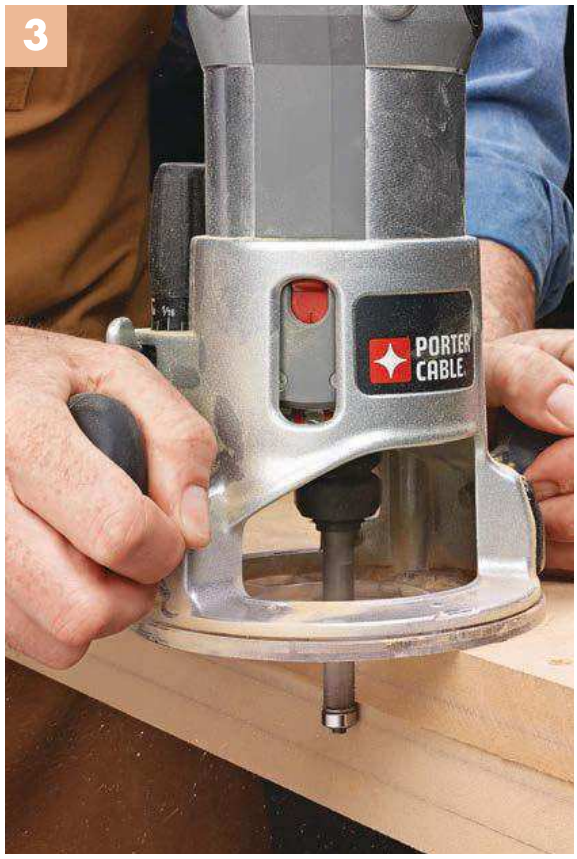

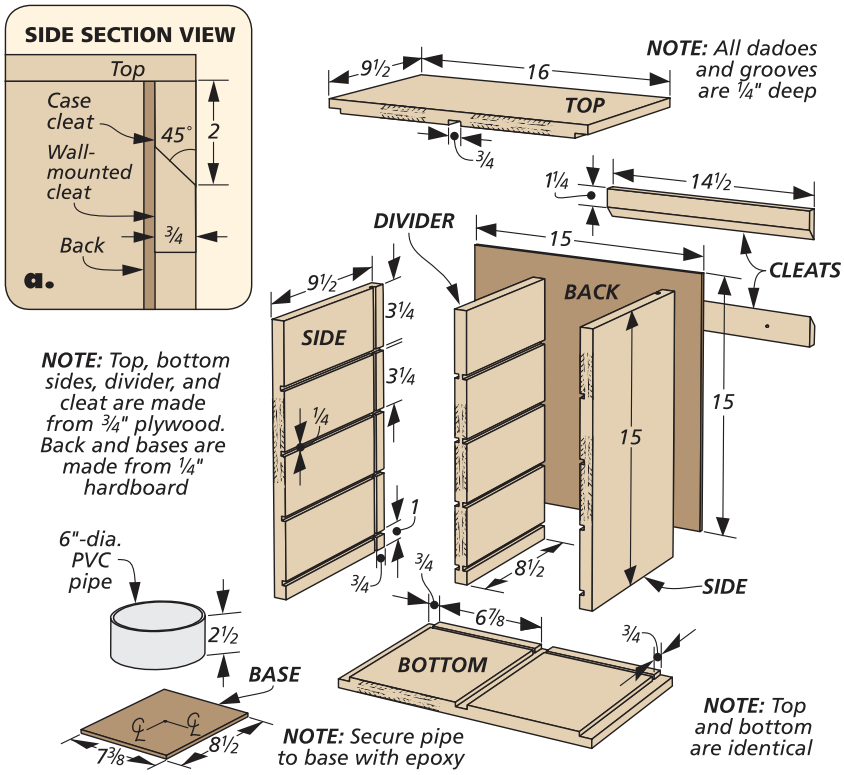

Sanding Disc Storage

My sanding discs always ended up floating around loose in the bottom of a workbench drawer. To help keep my discs better organized, I made the wall-mounted storage unit you see here.

SIMPLE CASE. The case is just a plywood box made using rabbets and dadoes. The sides and middle divider have aligning dadoes that allow the trays to slip in and out for easy access to the sanding discs. Shallow grooves in the top, bottom, and sides hold a hardboard back. I also added a beveled cleat to hang the unit on the wall.

TRAYS. With the case done, all that's left are the sanding disc trays. They are nothing more than short pieces of PVC pipe that are epoxied onto a square hardboard base, forming a small tray.

Butch Stutes
Bentonville, Arkansas

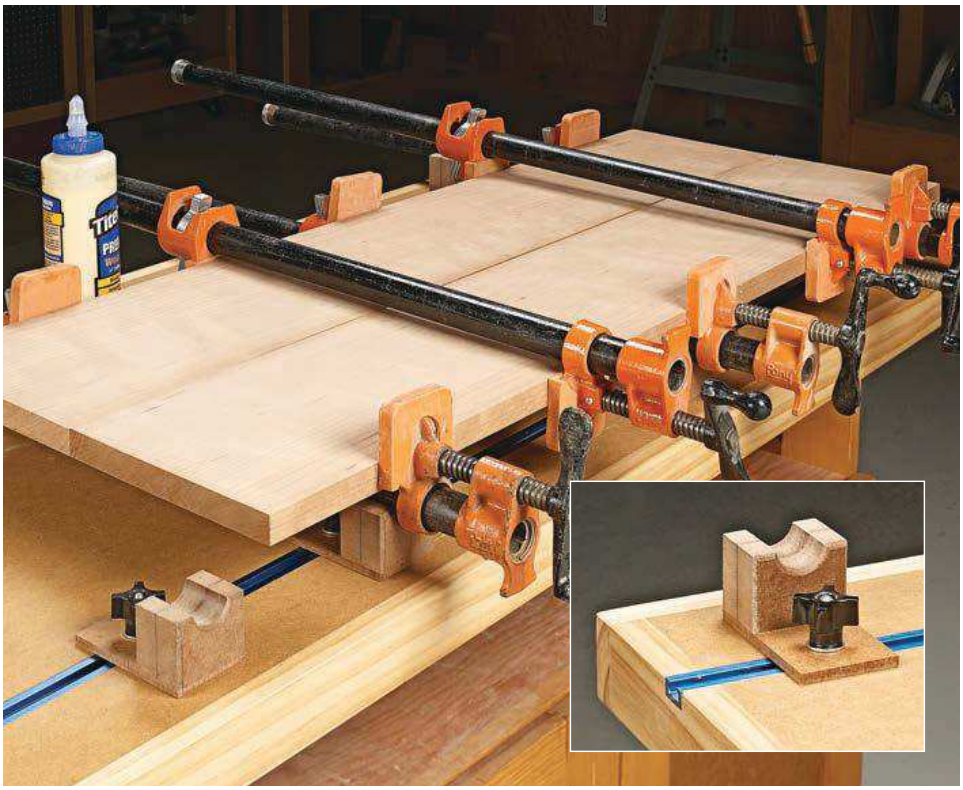

Locking Pipe Clamp Stands

I use a shop-built table with T-tracks set into the top for most of my assembly work. But even with a dedicated assembly table, my pipe clamps are oftentimes too long to sit on the table. To help support my clamps, I made several of these pipe clamp stands (inset photo) that lock in place in the T-track.

BUILD MANY. Each clamp stand consists of a hardboard base with an upright made from MDF. A threaded knob, hex bolt, and washer lock the stand to the T-track.

Start by gluing a couple pieces of MDF together. The pieces should be large enough so that when trimmed to size they yield two stands. I then drilled a hole slightly larger than the diameter of the pipe clamps and cut the piece in half through the center of the hole. All that's left is to chamfer the edges and glue it to the base.

Rustin Albrecht
Lancaster, California

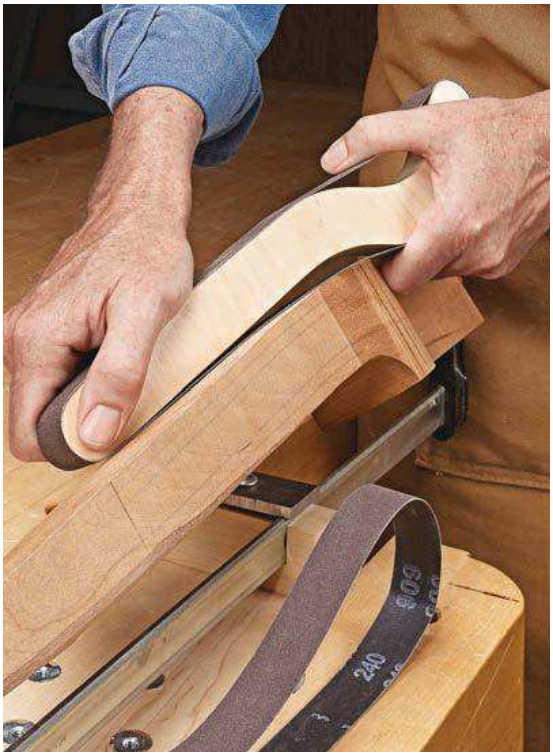

Curved Parts Sander

Sanding curved parts with power sanding equipment can be nearly impossible. Instead, I like to turn to hand sanding for smoothing these parts. To aid in sanding these curvy pieces, I always keep one of these shop-made detail sanders on hand.

PROPER SIZING. I size my detail sanders for use with 1" x 30" sanding belts, but other sizes will also work. The important thing to remember is the shape of the sander. They are designed so that when gripped near the curved end, the belt is properly tensioned to stay in place. I usually cut them a little oversized and sand them down to fit.

Serge Duclos
Delson, Quebec

PATTERN

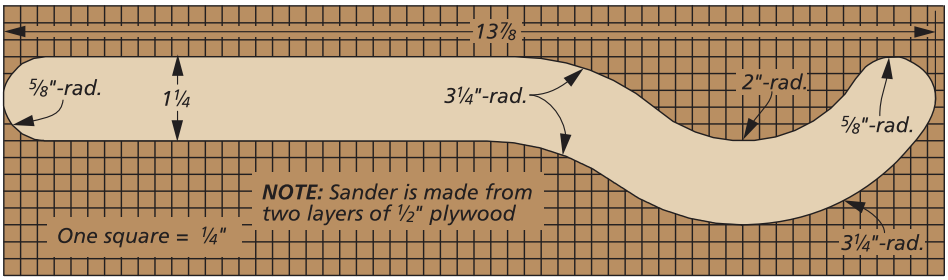

DIGITAL WOODSMITH

SUBMIT TIPS ONLINE

If you have an original shop tip, we would like to hear from you and consider publishing your tip in one or more of our publications. Jump online and go to:

Woodsmith.com
and click on the link,
"SUBMIT A TIP"

You'll be able to tell us all about your tip and upload your photos and drawings. You can also mail your tips to "Woodsmith Tips" at the editorial address shown on page 2. We will pay up to $200 if we publish your tip.

RECEIVE FREE ETIPS BY EMAIL

Now you can have the best time-saving secrets, solutions, and techniques sent directly to your email inbox. Just go to:

Woodsmith.com
and click on,
"Woodsmith Tips"

You'll receive one of our favorite tips by email each and every week.

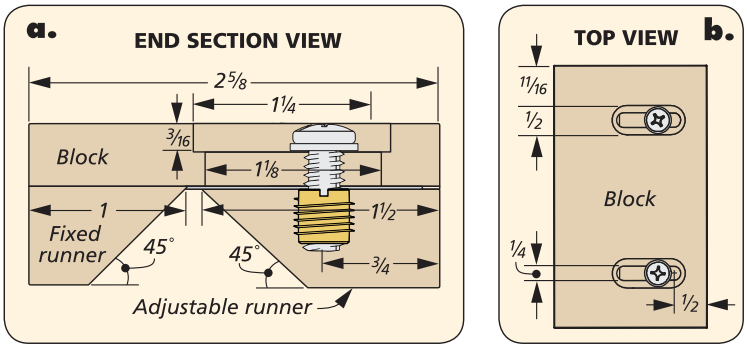

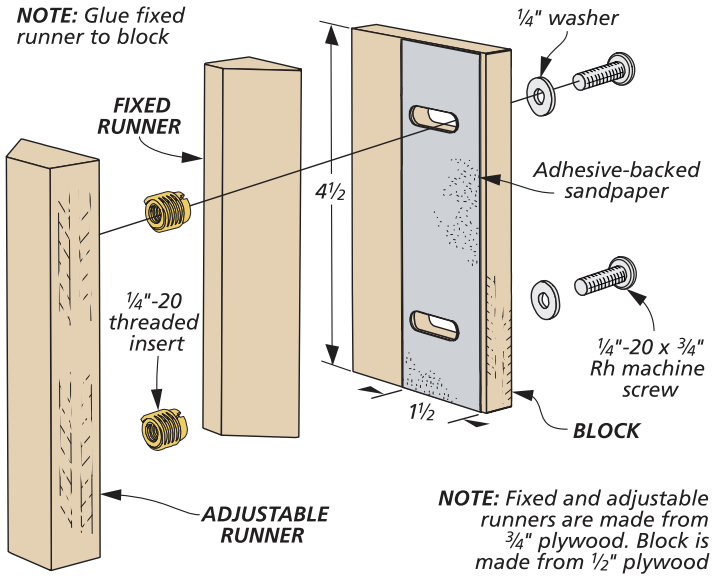

Chamfer Sander

Sanding a chamfer is a quick way to soften the sharp edge of a workpiece, but it takes some careful sanding to keep the angle and width of the chamfer uniform. To make the task easier, I built a chamfer sanding block that has two runners to guide it along the edge. This way, the angle stays at a consistent 45°.

QUICK BUILD. I made the two runners by ripping a piece of plywood with the blade tilted to 45° and then cutting them to length. One of the runners is glued to the block, but the other can be moved in and out to adjust the width of the chamfer. To make this runner adjustable, I routed stopped slots in the top face of the block and installed threaded inserts in the adjustable runner. The parts are then held together with machine screws.

USING THE SANDER. I attach a strip of 1½" wide, 180-grit adhesive-backed sandpaper to the flat portion of the block, as shown in the drawing. Installing the adjustable runner helps hold the sandpaper in place. When the desired chamfer width is set, tighten down the screws and start sanding. Stop sanding when both runners make contact with the workpiece.

This sander can be set for a ¼"-wide chamfer. But for anything wider than ⅛" it's probably best to turn to a hand-held router.

Bryan Foster
Tacoma, Washington

QUICK TIPS

Small Vacuum Access. *Larry Brotzman* of *Kyle, Texas,* had trouble maneuvering the large attachments that came with his shop vacuum to clean tight places. His solution was to slip a long, narrow funnel over the end of the hose to give his vacuum better access to those hard-to-reach areas.

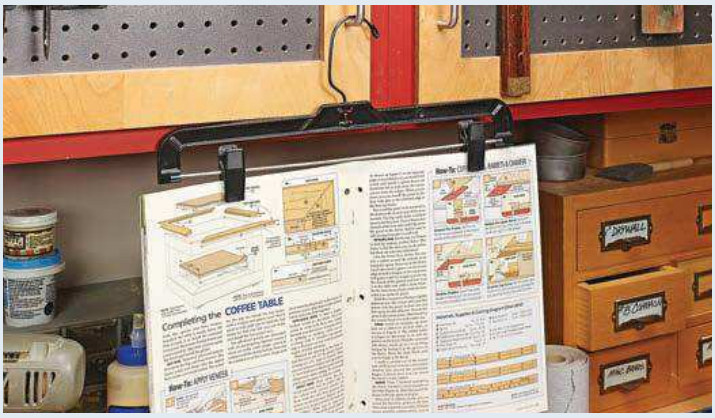

Plans Hanger. *Lyle Qually* of *Tekamah, Nebraska,* found another use for the department store clothes hangers that have spring clips on each end. He uses them to hang his woodworking plans at eye level in his shop. It also keeps them safely off his workbench where they might get damaged.

Auxiliary Small Parts Holder

When I made an auxiliary table for my drill press, I had no idea where to locate the T-tracks. I looked at some commercially available units and mimicked the T-track placement that they had used. This works just fine for about 80% of the drilling operations I perform. But when I need to drill holes in small pieces, like in the photo at right, my T-tracks were too far apart to allow my hold-downs to reach the workpiece. To solve this problem, I made this small parts holder.

SIMPLE CONSTRUCTION. This parts holder is easy and inexpensive to build. The only hardware required is a short section of T-track and a couple of threaded knobs and flange bolts. The base is just a piece of plywood with a hardboard cap glued on top. After gluing the pieces together and cutting the base to size, cut a groove to fit your T-track and screw it in place. I simply transfer my existing hold-down clamps from my drill press table to the auxiliary parts holder when needed.

Bill Huber
Haslet, Texas

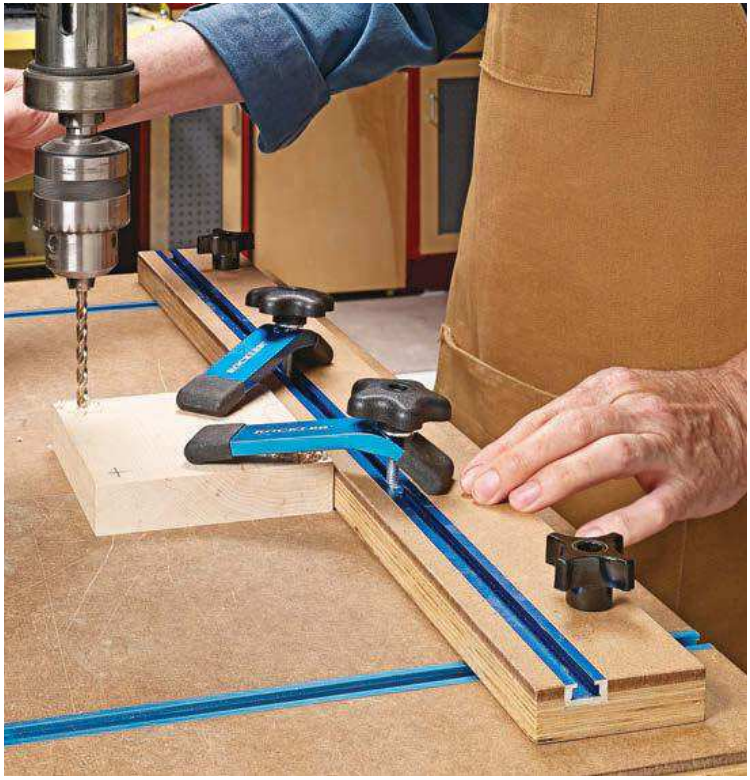

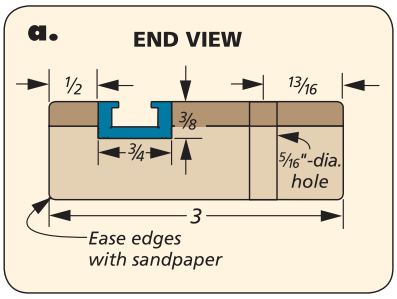

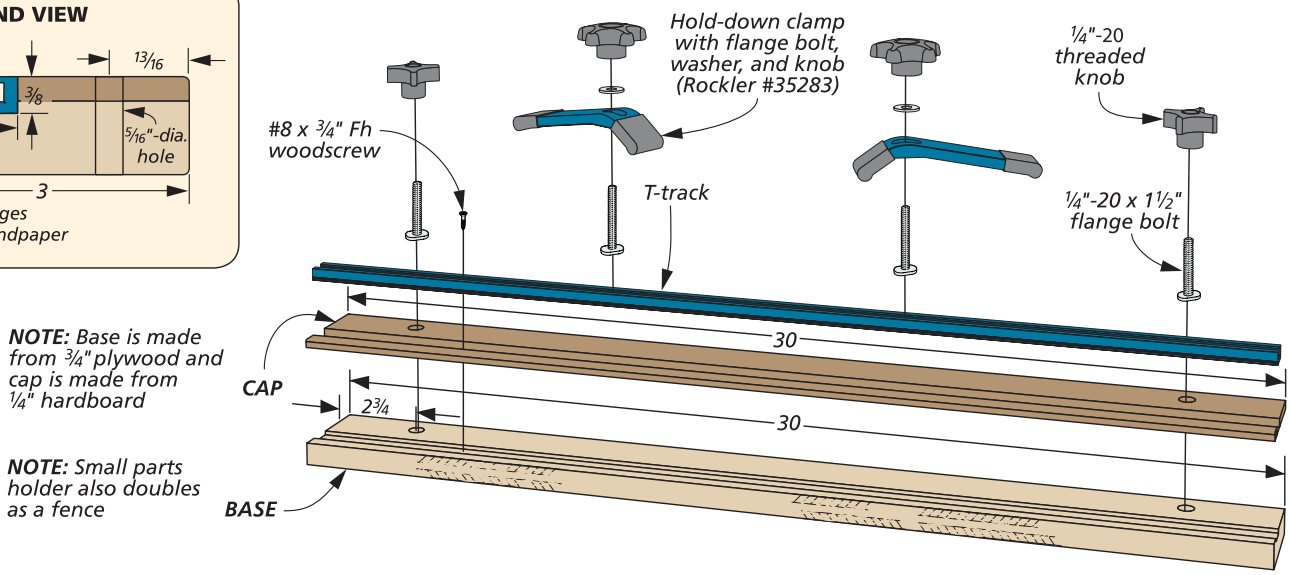

Versatile Towel Rack. *Charles Christian* of *Santa Barbara, California,* attached an inexpensive swing-arm towel rack above his utility sink. The three-pronged model (shown above) is the perfect place to let paint brushes and other supplies drip-dry without making a mess on the countertops.

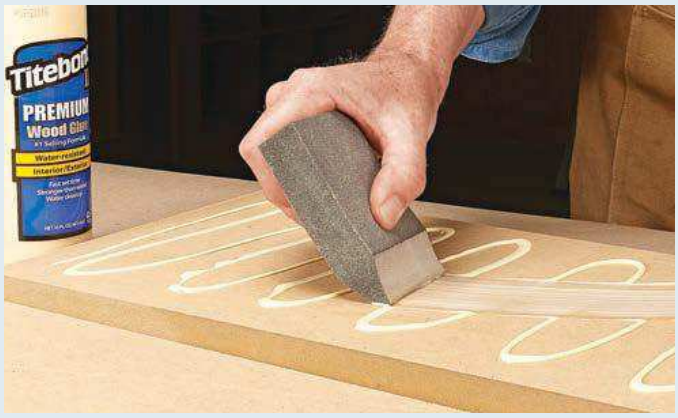

Recycled Sanding Blocks. Instead of throwing away his worn out sanding blocks, *James Potter* of *Brown City, Michigan,* gets a second life out of them as glue spreaders. He simply tapers the end with his band saw. The recycled blocks work perfectly for spreading glue on large panels.

all about

choosing & using Lacquer Finish

Of all the different topcoats you can apply to wood, you'd be hard-pressed to find one that goes on more easily or looks better than lacquer. That's part of the reason it's been in use for so long.

When you're shopping for lacquer, though, there are a lot of different choices. You can purchase everything from traditional, nitrocellulose lacquer in a spray can to advanced forms of pre-catalyzed lacquer that are applied with professional spray equipment.

I often get asked what kind of finish we use on the projects in *Woodsmith*. As you may have noticed on our *Sources* page, the answer is usually a couple coats of lacquer. But there's a little more to the story than will fit on that page. In our shop, we have a professional spray booth and equipment that allows us to use pre-catalyzed lacquer (main photo above).

This finish gives the projects featured in the magazine a classic appearance and excellent protection from damage. But even if you're not set up to spray finish in your home shop, there are still a number of useful lacquer options available to you.

▲ Lacquer finish can be applied with an aerosol spray can, with a brush, or with professional spray equipment.

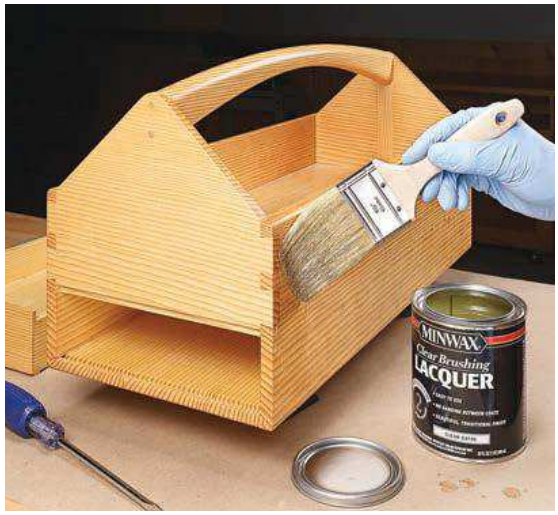

▲ Brushing lacquer evaporates more slowly than aerosol lacquer, so it's perfect for applying with a brush or roller on smaller projects.

THE EVOLUTION OF LACQUER. The word "lacquer" has been used to describe different types of finish since ancient times. But a version that's similar to modern lacquers first became available in the 1920s, and it's still the most widely used wood finish today.

Lacquer often contains nitrocellulose as the binder. Nitrocellulose is made by treating cellulose fibers from wood and cotton with acids, and it's the agent in lacquer that gives it

fast-drying properties. Modern lacquers often have added resins and plasticizers that allow them to bond well with wood, cure better, and be more flexible.

TRADITIONAL LACQUER. Woodworkers enjoy working with traditional lacquer because it's easy to apply, dries quickly, and it looks great. However, the traditional finish is soft and not as durable as other film-building finishes like varnish. It mars and scratches easily, for example, or can get damaged when it comes in contact with liquids.

CATALYZED LACQUERS. The solution to this problem was the addition of a catalyst, which is a chemical that adds hardness to the lacquer finish. While traditional lacquer simply evaporates to form a finish, the catalyst causes a chemical reaction to create a finish that's harder, better looking, and more durable than traditional lacquer finishes.

The first catalyzed lacquers were known as post-catalyzed lacquers. This meant you mixed in the catalyst immediately before using the product. The drawback was that the product would go bad in a short amount of time, so a lot of lacquer ended up being wasted. In the last couple of decades, however, pre-catalyzed lacquers — with the catalyst already mixed in — have become the standard. These products have a much longer shelf life, and they provide many of the same qualities of a post-catalyzed lacquer: fast cure times, good looks, and durability.

To make the projects in *Woodsmith* look their best, we made the switch to spraying pre-catalyzed lacquer as the finish on almost all our projects several years ago (main photo, previous page). It's a high-quality finish, but unfortunately it's not a realistic option for many home woodworkers. To spray pre-catalyzed lacquer at home, you'll need spray equipment, plenty of ventilation, and other safety devices like respirators and goggles. Really, a professional spray booth is the best place for spraying lacquer.

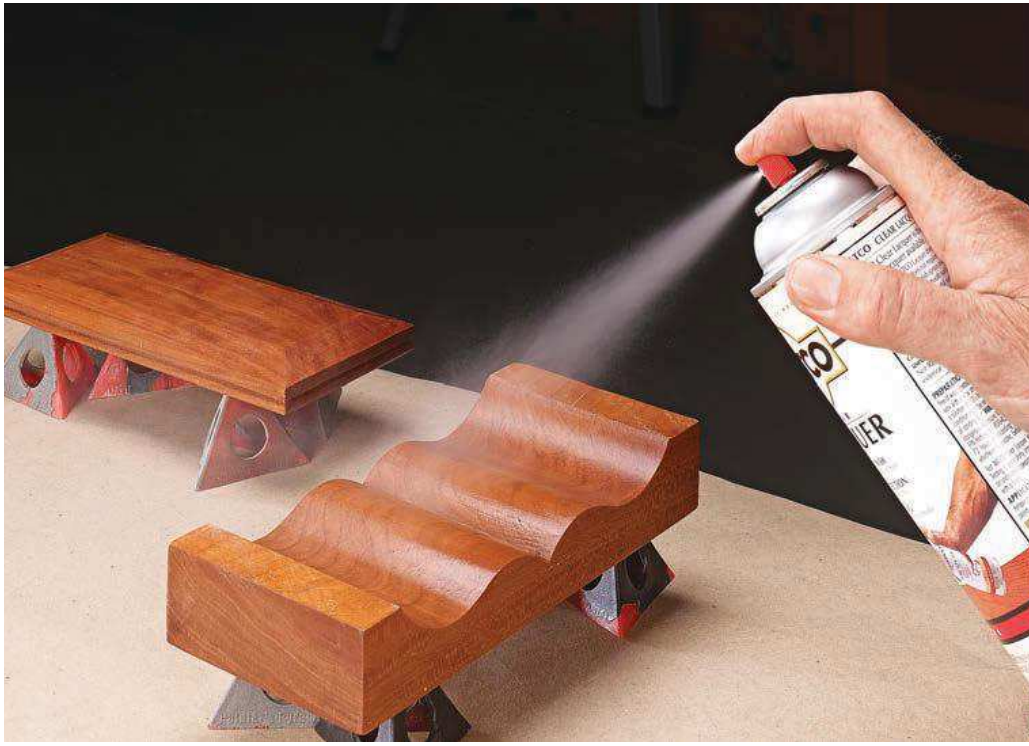

▲ Aerosol nitrocellulose lacquer dries quickly and offers moderate wear resistance. Plus, it imparts a smooth, amber tone that's desirable in many woodworking projects. I find that it's an excellent choice for the smaller, decorative projects that I make in my shop.

LACQUER FOR THE HOME SHOP. However, there are still a number of great lacquer options for home use. Companies like *Watco*, *H. Behlen*, *Minwax*, and others make lacquers in aerosol spray cans that come in different sheens, colors, and finishes (above). For example, *H. Behlen* makes a "Smooth-Coat" lacquer that has added wax for a buffed, hand-rubbed look right out of the can. Though not as strong as pre-catalyzed, many "topcoat" lacquers from spray cans have improved durability over their counterparts from decades ago. There are even brushing lacquers that are mixed with slower-evaporating solvents if you prefer to brush on your finish (photo, previous page). Keep in mind that you still need adequate ventilation and safety equipment when using these lacquers.

In my home shop, aerosol or brushing lacquer probably wouldn't be my first choice for a project like a table that's going to see a lot of use and abuse. But for smaller projects, it's an excellent choice for its great-looking appearance and ease of application. W

	Application Method	Dry/Recoat Times	No. of Coats Required	Sanding Between Coats?	Overall Durability
Aerosol Lacquer	Spray Can	Between 30 minutes and 2 hours	3 or more	Suggested if 6 hours or more pass between coats	Moderate scratch and wear resistance
Brushing Lacquer	Brush or Roller	Between 30 minutes and 2 hours	3 or more	Only if surface feels rough to the touch	Moderate scratch and wear resistance
Pre-catalyzed Lacquer	Professional Spray Equipment	Between 15 minutes and 1 hour	2 to 3 (but no more than 3)	Recommended	High scratch and wear resistance

choosing a router for your Router Table

A router table greatly expands the usefulness of a hand-held router. It essentially turns your router into a miniature shaper for routing profiles and joinery. But with the dozens of routers available, choosing one for your table can be a challenge. I'll help break down the features to look for when considering one for your shop.

FIXED-BASE ROUTERS. For starters, you can narrow your selection of routers to those that have a fixed base. While plunge routers can be used in a table, they're better suited for hand-held use. To mount a plunge router in a table, you'll need to remove the springs, which in turn makes it quite a bit more difficult to raise and lower the bit.

Most routers are available in kits that include a fixed base and plunge base. I recommend this option because you can leave the fixed base permanently mounted to the insert plate in your router table and still use the motor in the plunge base for all your hand-held operations.

MOTOR SIZE. A common question when choosing a router is, "What size should I get?" In routers, size refers to the horsepower rating of the motor. Various sizes are shown below. These can range from about 1.5-hp for entry-level routers to 3.5-hp for production models.

The answer to this question really depends on the type of routing you'll be doing. The lower end of the power range is fine for routing small to medium profiles on the edge of a workpiece. The 1.5-hp fixed-speed *Ryobi R163GK* comes with only a ¼" collet. But its $60 price tag makes it a great option for a first router.

The mid-range options (1.75- to 2.25-hp) are small enough for hand-held use. Plus, they can handle most common tasks at the router table with ease.

The heavy-duty routers are designed more for production shops. But if you build a lot of cabinetry or use large-diameter bits (like panel-raising bits) on a regular basis, these 3+ horsepower beasts may be the right choice for you.

VARIABLE-SPEED. One feature you'll find when shopping for routers is a variable-speed option. I've gotten by for many years with a single-speed router. But there are times, especially when using large-diameter bits, that you'll need to slow down the speed. A variable-speed router provides better results by giving you more control of the cutting speed.

HEIGHT ADJUSTMENT. Once your router is mounted in the table, a common task is

▲ Router motors vary in size from the entry-level 1.5-hp *Ryobi R163GK* to the 3.5-hp *Milwaukee 5625-20* router. Mid-size routers, like the *Ridgid R22002*, can handle most routing tasks in a router table and fall in the 1.75- to 2.25-hp category.

adjusting the bit height. Manufacturers incorporate some handy design features that make adjusting the bit height much easier from above the table, as shown in the lower left photo. This is a major convenience that has been added to routers in recent years. It prevents you from having to stoop over and fumble with controls to adjust the height of the bit.

The methods used for height adjustment vary by the manufacturer. The photos on the upper right show a couple of variations. Most routers include a knob or wrench to engage the adjuster through the baseplate. (The *Ryobi* doesn't come with a wrench but you can order one for less than $1 from their website.)

For most routers, you still need to reach under the table to release the motor clamp before making adjustments. (The *Porter-Cable 895* is a notable exception, as shown in the center photo below.)

The *Milwaukee* routers use a coarse lead screw for bit height adjustment.

▲ A spindle lock means only one wrench is needed to change bits but the motor may need to be removed to access the lock.

▲ Bit height adjustment varies from a coarse thread for quick adjustments (left photo) to a fine thread for small tweaks (right photo).

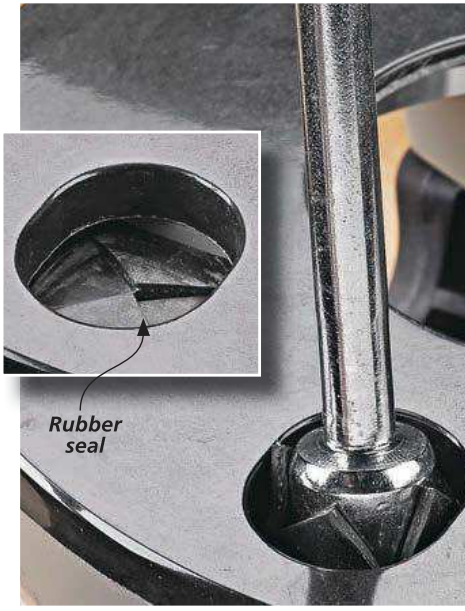

▲ *Milwaukee* routers incorporate a rubber seal to help keep dust out of the bit height adjustment mechanism.

This means that it takes fewer turns of the adjustment knob to move the bit a given distance (one turn equals 0.2" change in bit height). For router table use, I prefer the fine threads of the *Bosch* routers. They allow you to more easily sneak up on the perfect bit height since each turn of the knob advances the bit only 1/16".

You'll need to drill an access hole through the insert plate in your router table for the tool to reach the adjuster. Use the router's baseplate as a guide to locate and drill the hole. And when you mount the router to the insert plate, remove the stock baseplate in order to gain a little extra range in bit height.

Bosch routers are also a little unique in that the adjusment screw is located at baseplate level, as shown in the lower right photo. With other routers, the wrench passes through the baseplate to engage the screw below. This sometimes requires a little fumbling around to get the wrench to engage the screw unless you look under the table to guide it.

BIT CHANGES. In addition to adjusting the bit height, the ease with which you can change bits is an important factor. Some routers require two collet wrenches to secure the bit, as shown in the main photo on the previous page. Others include a spindle lock, as in the left photo. The key is how easy it is to reach the lock or spindle nut. The reality is, you may need to remove the router motor to change bits.

CHOICES. Your choice of router for your router table boils down to budget and features you like. With features like above-the-table height adjustment, today's routers are well-designed for use on a router table. There are a lot of good choices. It's pretty amazing how much a table-mounted router expands your woodworking capabilities and efficiency in the shop. W

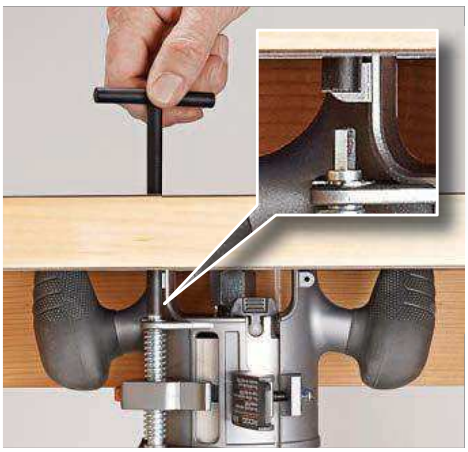

▲ Most routers allow bit height adjustments to be made from above the table by using a wrench through a hole in the baseplate.

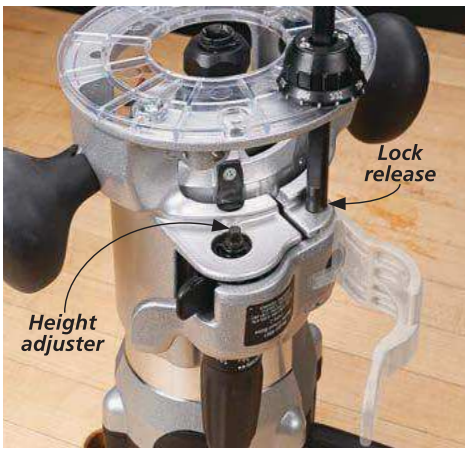

▲ The *Porter-Cable 895* features a unique above-the-table lock release in addition to the height adjuster.

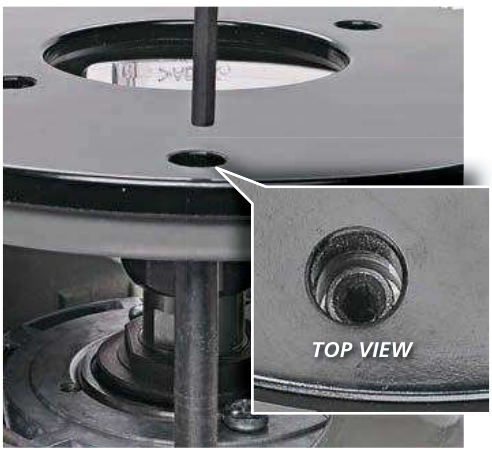

▲ *Bosch* routers locate the adjustment screw for the bit height right at the baseplate for easy access.

great gear

outfit your shop with an Air Hose Reel

▲ Some manual reels, like the one shown here from *Legacy*, have a layering device that prevents the hose from tangling.

Air-powered tools are a mainstay in many workshops. And while they're useful for a number of tasks, using these tools also means dealing with an unwieldy air hose. Keeping an air hose corralled and neatly stored away is a necessary evil. So if you use air-powered tools much, you may want to consider an air hose reel for managing this task.

All air hose reels basically accomplish the same mission: They keep an air hose neatly wound around a reel. A short leader line connects the reel to a compressor. And most incorporate a swivel fitting to keep the hose from getting tangled up.

The primary difference between air hose reels is how they release and retract the hose. Some work manually, while others are automatic. All of the air hose reels I look at here can be found in Sources on page 67.

MANUAL REELS

True to their name, manual reels require a little user effort to operate. Many of these reels, like the one shown at left, have a hand crank on the side that is used to retract the hose. And because of their relatively simple design, there is usually very little that can go wrong with this type of reel. This simplicity also means these units are generally less expensive than automatic reels.

But just because they cost less doesn't mean they're devoid of user-friendly features. The model shown at left has a

handle that makes the unit portable. It can also be surface-mounted to a wall or ceiling. Another handy feature is the layering device on the front of the reel. This mechanism helps to guide the air hose onto the reel in neat, even layers.

AUTOMATIC REELS

Making the jump from a manual to an automatic reel will certainly offer you more choices. While most of the automatic reels use some kind of spring-loaded mechanism to retract the air hose, there are now motor-driven models available on the market, as well.

SPRING-LOADED RETRACTION. Spring-loaded air hose reels, like the one pictured at right, function through the assistance of a high-tension internal spring. As the air hose is pulled off the reel, the spring is stretched until the desired amount of hose is extended.

A ratchet device holds the reel in place while the hose is in use. When finished, a tug on the hose disengages the ratchet and the pressure from the spring retracts the hose. Many reels have rollers that prevent the hose from snagging as it rewinds (inset photo, right). But even with those, it's necessary to guide the hose by hand to prevent it from whipping around.

▲ Spring-loaded air hose reels are perhaps the most common type of hose reel available. The version shown here from *Coxreels* uses pressure from an internal spring to retract the hose. Non-snag guide rollers (inset photo) help to reduce hose wear and avoid binding.

MOTOR-DRIVEN OPERATION. In the past, motor-driven air hose reels were mostly found in industrial settings. The main reason for this was their high cost. That's what makes the *RoboReel* from *Great Stuff, Inc.* (main photo, previous page, and below), a prime candidate for the do-it-yourself market.

Available for $299, the *RoboReel* is by no means cheap, but it's comparable in cost to other quality spring-loaded reels. It's also well below the price of an industrial motor-driven unit.

With the *RoboReel*, the hose extends out much the same as other reels. But when it's time to retract the hose, you only need to press a button, and a motor housed in the main unit rewinds the hose automatically. For convenience, there is a rewind button located on the main unit and also one near the end of the hose (middle photos, below).

Another nice feature of this air hose reel is the two-speed motor. As the hose is retracted, the motor slows before the end of the hose leaves the ground. This avoids any whipping action that could cause damage or injury. This unit also has a safety feature that stops the retraction if the rewinding hose is stepped on or impeded in any other way.

The standard *RoboReel* comes with a ceiling mount that is ready to be bolted in place (far left photo). Or you can purchase the accessory shown at left. This bracket allows the ceiling-mounted model to be attached to a wall.

WHAT SHOULD YOU BUY? Picking the style that is right for you will depend on a few factors. How much you're willing to spend is one consideration. Where you need to use the reel is another. (Only the manual reels and the *RoboReel* are available in a portable version.) And while all of the models that I looked at had an air hose supplied with the reel, not all units do. So be sure to pick a model that meets all of your needs and you'll be well on the way to taming your unruly air hose. W

▲ The ceiling-mounted *RoboReel* (above) comes out of the box ready to install.

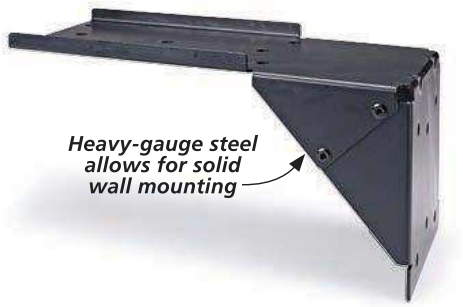

▲ A steel bracket can be purchased separately that allows the *RoboReel* to be mounted to the wall or a vertical column.

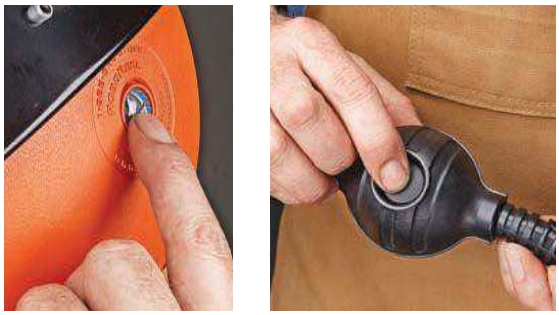

▲ Two convenient rewind buttons make operating the *RoboReel* a breeze. One is located on the main unit, while the other is near the end of the hose.

Weekend Project

Metal Inlay Box

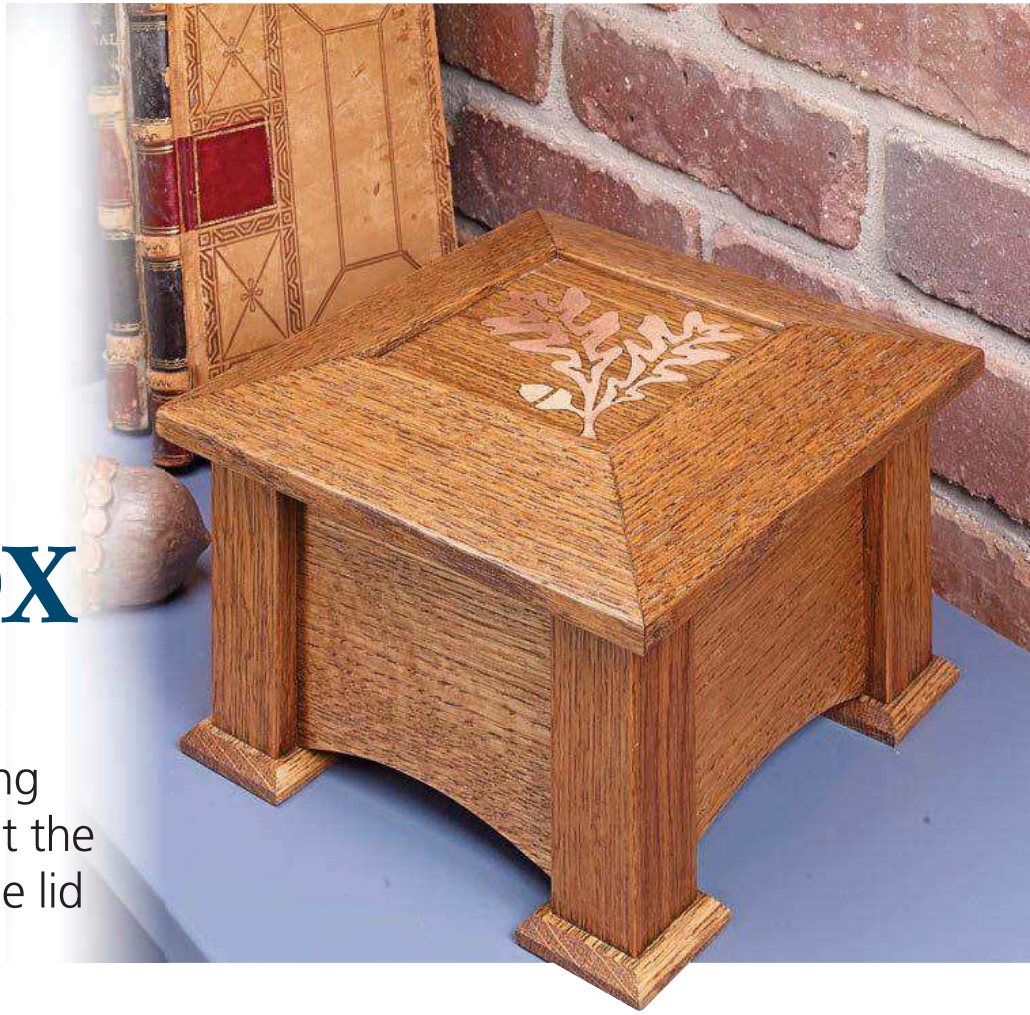

This box is an eye-catching project all on its own, but the metal inlay pattern on the lid makes it even better.

Making a box offers a good break from typical woodworking. Boxes require a small investment in materials — often from your scrap bin. And in a short time, you have a great-looking keepsake.

However, a box isn't short on woodworking challenges. In fact, a box invites close inspection. So it pays to focus on the details. As a woodworker, the benefit is that the scale makes taking on a new technique a lot more manageable. That's certainly the case with this box.

METAL INLAY. The inlaid top is what draws your attention. I used thin metal pieces to make up the pattern. As you can see, the metal provides a unique look.

Before getting to the inlay, you need to build the box. This Craftsman-style box has plenty of details. Corner posts give it a solid stance. And a few bevels and curves keep it from looking too blocky.

FULL-SIZE PATTERN

Woodsmith GO ONLINE EXTRAS

For additional decorative patterns, go to Woodsmith.com

Materials, Supplies & Cutting Diagram

A	Posts (4)	1¼ x 1¼ - 4
B	Feet (4)	5/16 x 1⅞ - 1⅞
C	Sides (4)	½ x 4 - 5
D	Bottom (1)	¼ ply. - 5½ x 5½
E	Lid Panel (1)	¼ ply. - 4¼ x 4¼
F	Lid Veneer (2)	⅛ x 4¼ - 4¼
G	Lid Molding	⅞ x 2 - 36 rgh.

- (4) #6 x ¾" Fh Brass Woodscrews
- (1) 6" x 12" sheet 16-ga. Copper
- (1) 6" x 12" sheet 16-ga. Bronze

1¾" x 4" - 36" White Oak (2 Bd. Ft.)

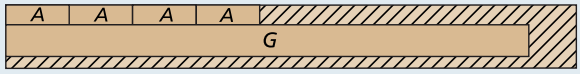

¾" x 5" - 36" White Oak (1.3 Bd. Ft.)

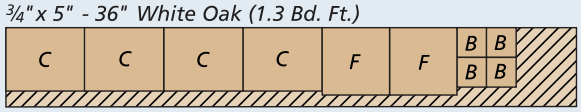

NOTE: *Plane all parts to thickness shown in materials list*

ALSO NEEDED: *One 24" x 24" sheet of ¼" oak plywood*

CORNER POSTS

The main body of the box only requires a handful of parts. Posts and feet make up the corners of the box. These are joined by the sides and bottom. I made the box out of quartersawn white oak to enhance the Craftsman look, but you can feel free to use other materials.

POSTS. The starting point on the box body is the corner assemblies you see in the drawing at right. The posts come first and have a few key details that I want to highlight. For the straightest grain on the four faces of the posts, look for riftsawn boards — where the end grain is running close to 45° to the faces.

A pair of grooves on the inside faces of the posts hold the box sides, as in detail 'b.' When it comes to cutting joinery on small parts like this, I prefer to use the router table for better control.

An added benefit is that a straight bit creates a smooth, flat-bottomed groove. The setup is shown below in Figure 1. The grooves are shallow enough that you can cut them in a single pass. I used a push block with a heel on the end to keep my fingers clear of the bit.

The corner between the grooves is eased with a chamfer bit to soften the edge, as you can see in Figure 2. You may be able to rout this in a single pass, but I cut the chamfer in two passes to make sure the profile is smooth and crisp.

A dado near the bottom of each post is the remaining detail that you need to take care of. This dado captures the bottom of the box at assembly time. The dado is cut with the chamfered face down on the router table. The trick is holding the post steady. My solution is shown in Figure 3 — a backer block that has a matching bevel cut on the leading edge. The backer also prevents tearout as the bit exits the cut.

FEET. Thin square feet anchor the posts. A small chamfer is routed on the upper edges. In order to make this cut safely, I used a rubber-bottomed push pad to control these small parts while routing the chamfer. The feet are secured to the bottom of the posts with small screws.

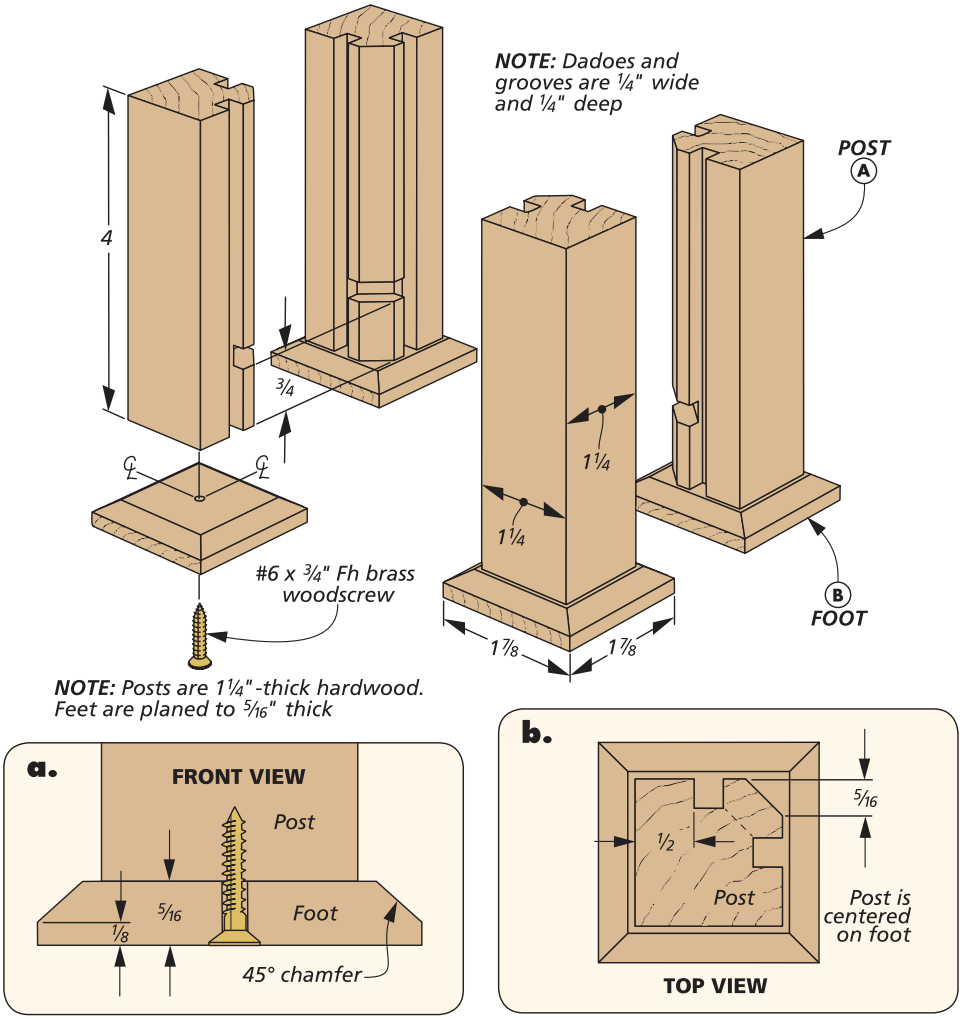

How-To: ROUTER TABLE JOINERY

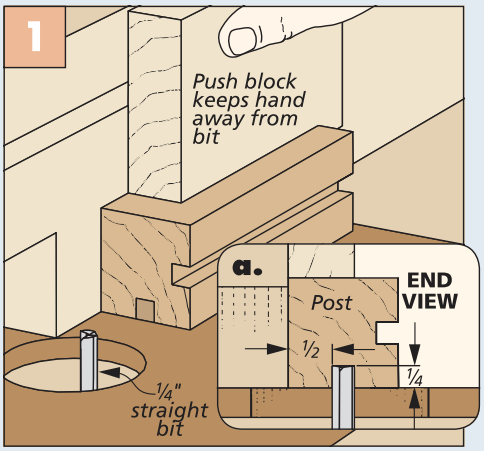

Smooth Grooves. Use the same fence setting to rout both grooves. Flip the post end for end to make the second cut.

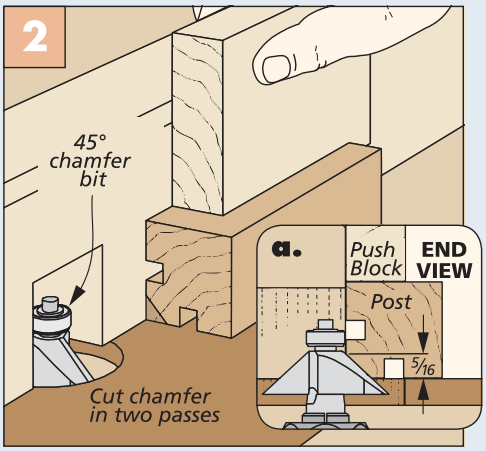

Chamfer the Corner. The chamfered edge creates a reference face for cutting an angled dado to hold the bottom.

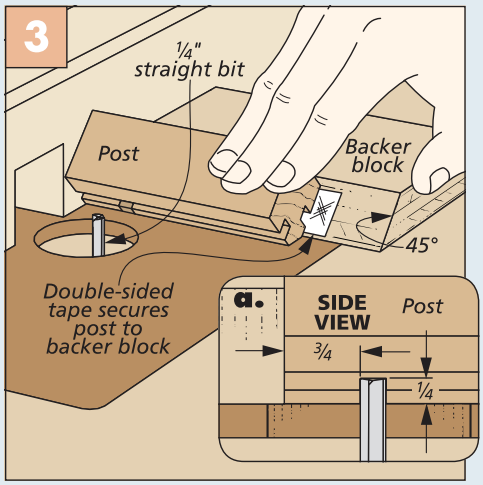

Easy Angled Dado. The beveled edge on the backer block stabilizes the post while you cut the dado.

Solid-wood **SIDES**

Wrapping up the body of the box is simply a matter of connecting the dots, or grooves, in this case. Solid-wood sides span the distance between the posts, and a small plywood panel closes off the bottom. The steps to get there will go by in short order.

SIDES. The material for the four identical sides is planed down to ½" from thicker stock and cut to final size. Take extra care in sizing the parts so that all four are the same size.

Like the posts, the sides have two joinery details to take care of. The first of these is to form a tongue on each end to fit into the grooves you cut in the posts. The shoulder on this joint creates a nice clean look and conceals any inconsistency in the groove or tongue.

The tongue is created by routing a rabbet on each face, as shown in Figure 1 below. I used some test pieces to sneak up on both the thickness and length of the tongue for a snug fit and a tight joint line.

GROOVE. The other bit of joinery to tackle is cutting a groove. This groove (along with the dadoes in the posts) holds the bottom panel. Like before, I handled this at the router table using a straight bit.

The key is making sure the groove in the sides aligns with the dadoes in the posts. A straightforward way to do this is to fit one of the sides into a post and mark the groove location directly on the side. You can use that piece as a gauge to set the fence on the router table.

CURVED EDGE. Having taken care of the joinery means you can change gears and do a little shaping. The lower edge of the sides has a slight curve cut into it. This curve adds detail to the look of the sides and gives the whole box a visual lift.

My aim in making the curves was to have all four as consistent as possible. The method I used was to shape the curve on one side and use it as a template for shaping the others. To do that, draw the curve on a side and rough cut the waste at the band saw. From there, use a sanding drum, files, and sandpaper to refine the shape.

With a pleasing curve established, trace it on the remaining three sides. Like the first, you cut away most of the waste at the band saw. For the final trimming, use the first side as a template to smooth the others with a router and a flush-trim bit for a perfect match.

BOTTOM. All that's left on the box body is to make the bottom. I made it from a piece of ¼" plywood. But there's a little more going on here than simply cutting the piece to size. That's because the corners need to be clipped to fit into the angled dadoes in the posts.

You want to avoid trimming too much and ending up with a gap. So I took my time and made several cuts to sneak up on a good fit in the corners. From there, you can glue up the box body.

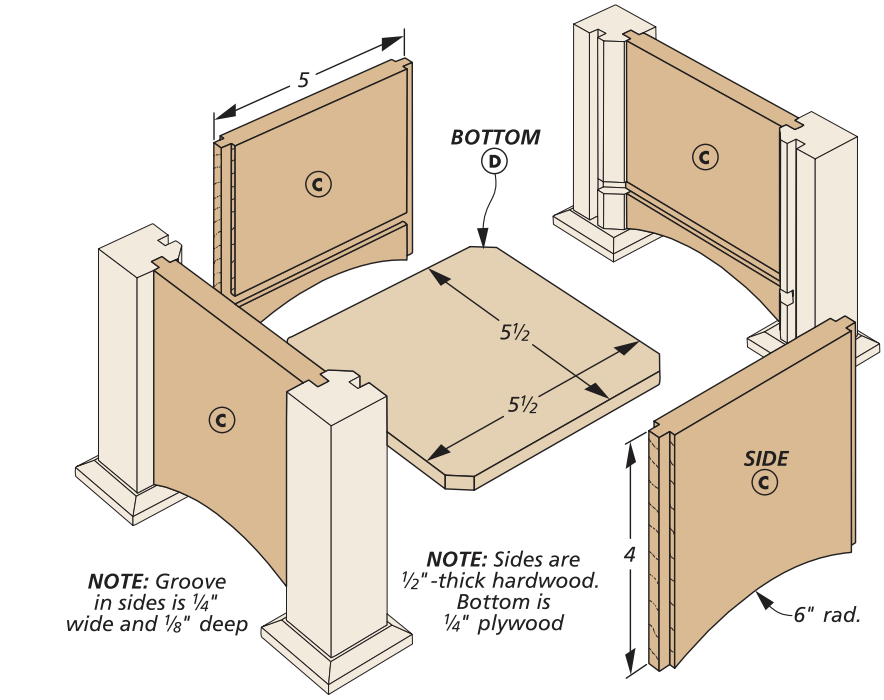

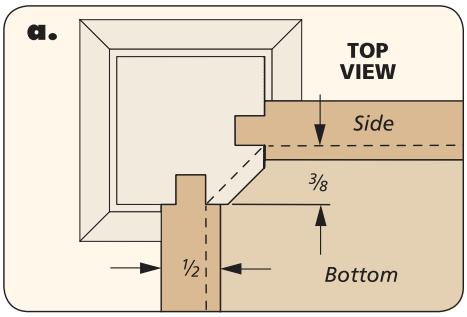

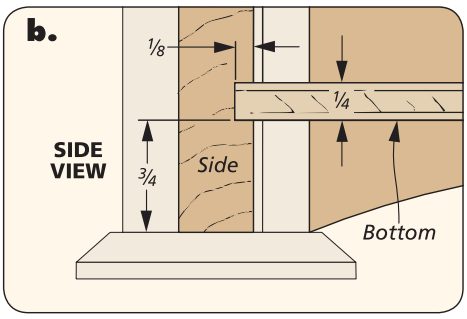

How-To: PANEL DETAILS

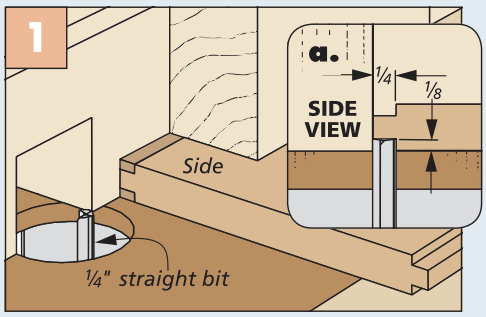

Create Tongues. With a straight bit in the router table, cut a rabbet on each face to create a tongue that fits the grooves in the posts.

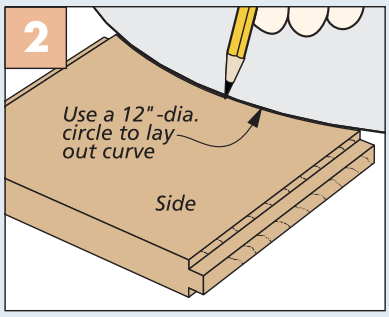

Lay Out Curve. The curve on the lower edge of the box side runs right to the shoulder of the tongue on each end.

FRAME & PANEL LID

The other component of the box is the lid. It's made up of a laminated panel wrapped with beveled molding, as shown in the drawing on the next page.

NOTE: *Turn to page 52 for metal inlay technique*

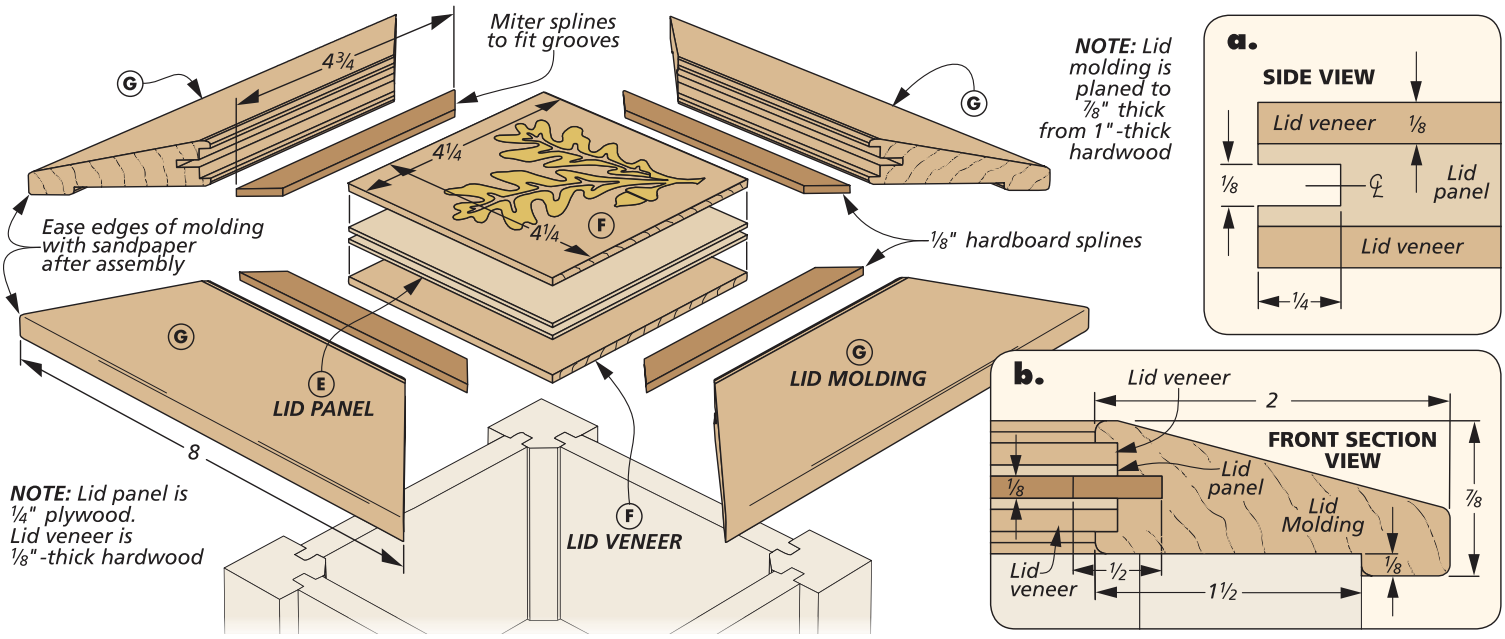

LAMINATED PANEL. There are several techniques to look at. The first of these is making the center panel. The panel has a plywood core. A thin piece of wood is glued to the top face to provide a thick substrate for the metal inlay. A second piece of wood glued to the bottom face balances the panel. I routed a groove around all four edges with a slot cutter. This holds a spline for attaching the molding.

The technique to add the metal inlay pattern isn't difficult, and you can use it on a wide variety of projects. Turn to page 52 to see how it's done.

LID MOLDING. Completing the panel means you can move on to making the molding. The box at left walks you through the steps. I found that the order shown helped me to get the best results and work as safely as possible.

Prepare molding blanks that are sized to final width and thickness. These extra-long blanks are easier to handle. A groove on the inside edge houses the panel for a clean look, as shown in Figure 1.

To reinforce this joint, a deeper narrow groove is cut that aligns with the slot in the panel (Figure 2). Hardboard splines span the joint for a solid connection.

A rabbet on the bottom face of the molding registers the lid on the box to keep it centered. You can cut the rabbet with a standard blade, as in Figure 3.

I eased the edges with sandpaper to create gentle roundovers, as in detail 'b.' Then the molding pieces can be mitered to wrap around the panel. The key here is to carefully set up your table saw to cut accurate miters for tight joints.

Cutting the splines to size and mitering the ends comes next. I then assembled the lid and molding at one time using slow-set glue and a band clamp.

The upper face of the lid is beveled. I waited until after assembly to do this because the completed lid is larger and safer to handle while making the cut.

The payoff from all your efforts is seen once the stain and finish are applied. You can then find a suitable place to display the box and fill it with small treasures. W

How-To: MITERED FRAME

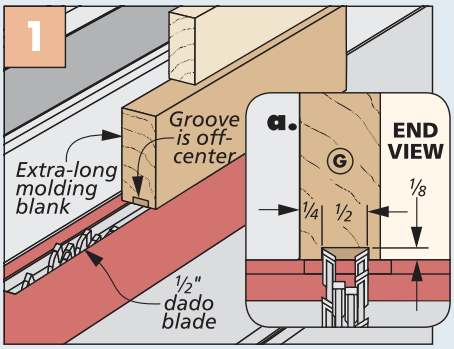

Wide Groove. Take your time to size the dado blade to match the thickness of the laminated panel.

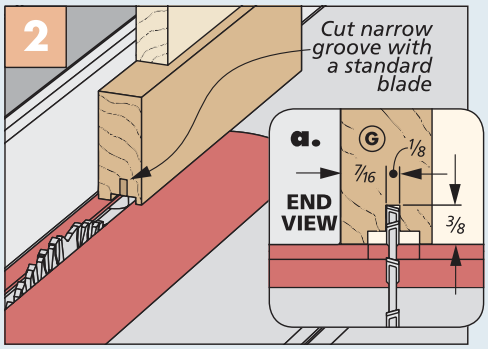

Narrow Groove. Mark the molding so that the narrow groove is aligned with the slot in the edges of the panel.

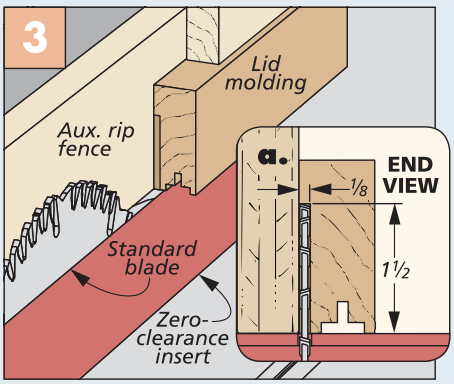

Shallow Rabbet. To avoid damaging the rip fence, attach an auxiliary fence before cutting the rabbet.

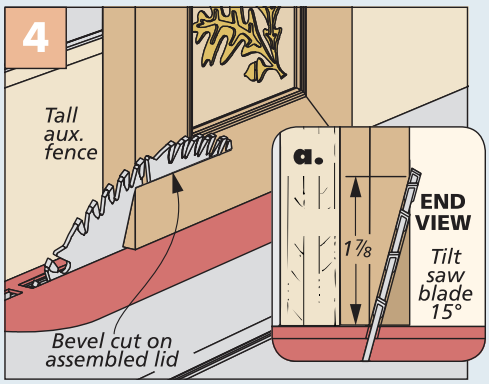

Bevel Last. A tall auxiliary fence and a zero-clearance insert support the lid as you bevel the edges.

Shop Project

Versatile Add-On Bench

This pint-size bench is big on options to give you a solid grip on all kinds of workpieces — and raise them to a more comfortable level.

At first glance, the bench you see here looks like a workbench model or a toy. But nothing is further from the truth. The reason for building it came after a long session doing some detail work. My sore back told me I needed to come up with a more comfortable shop setup.

In some ways, it's inspired by my full-size workbench. It features solid construction and offers a range of options to secure workpieces. The photos above and on the next page show a few examples of how to put it to use.

A typical workbench uses vises and bench dogs to secure a workpiece. To keep things simple and versatile, this benchtop bench uses ordinary bar clamps to do the work. The two-piece top has a slot and wide overhangs on the sides to give plenty of places to clamp a piece flat on the worksurface.

Another slot on the front of the bench creates access to clamp a part to work on its edges or ends. A series of notches and a divider panel hold bar clamps in place so you won't need a third hand to lock something down. Two hardwood vise jaws spread out the clamping pressure. Bar clamps are even used to attach the bench to any surface (right photo).

There are only a handful of parts to this bench, and the construction is straightforward. So you'll be putting it to work in no time. Your back will thank you.

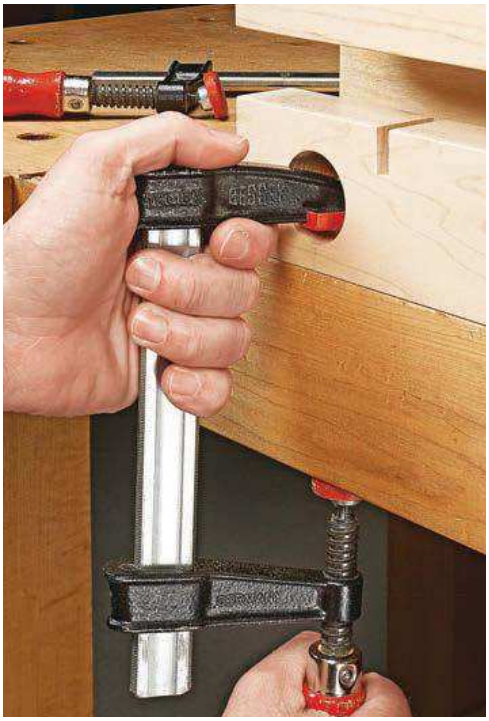

▲ A pair of openings at the front of the bench accept the head of a bar clamp to secure the bench.

Stable plywood **BASE**

There are two main assemblies in this mini bench. The one you start with is the base. In addition to providing a stable stance for the bench, it provides a place to clamp it to another surface.

For simplicity, the parts in the base assembly are all made from plywood. I used Baltic birch. Since the pieces are all rectangular in shape, cutting the parts to size at the table saw goes quickly.

LARGE BASE. The base of the bench has a groove cut along the front edge. It captures the divider, which stiffens the front of the assembly.

For a rigid joint, it's important for the groove to match the thickness of the plywood, as shown in detail 'a.' To make this groove, I used a dado blade in the table saw. It took a few test cuts to dial in the combination of chippers and shims I needed to get a snug-fitting groove.

DIVIDER. The next part of the base is the divider. It rests in the groove in the base and is glued and screwed to the supports behind it, as shown in detail 'b.'

SUPPORTS. Located behind the divider are two stout supports. These raise the top of the bench to a comfortable height. Even though the bench is small, I still wanted it strong enough to stand up to serious work. So I made the supports from two layers of plywood. Gluing up four individual parts to make the supports can be fussy work. Instead, laminate two oversize plywood pieces into a large blank. From this you cut the supports to their final size.

The supports are glued and screwed to the base and divider, as shown in the main drawing and detail 'a.' It's a good idea to drill pilot holes to avoid splitting the plywood as the screws are driven in. The supports are flush with the edge of the groove. Take care to install them square and parallel.

I want to point out that the supports rest below the divider. This creates a lip that registers one of the top pieces to create an interlocking connection.

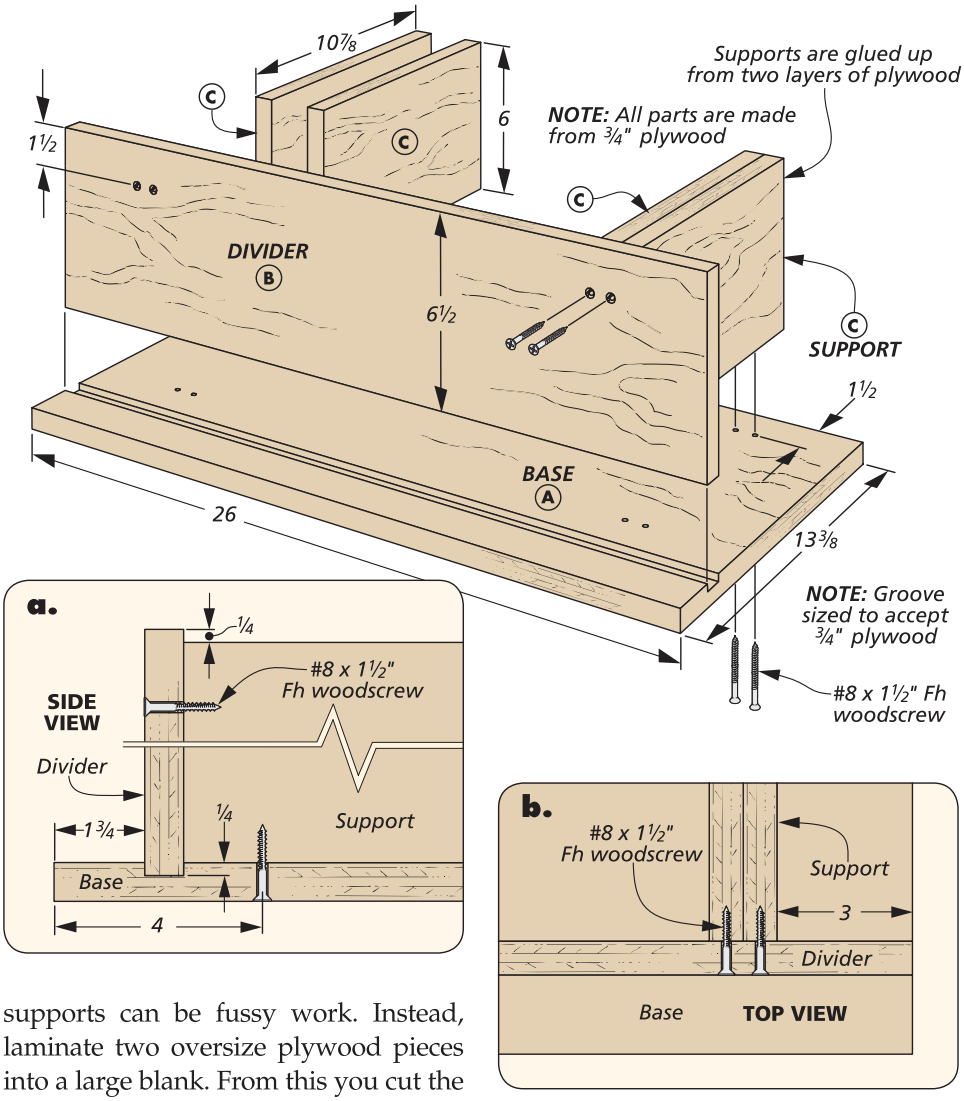

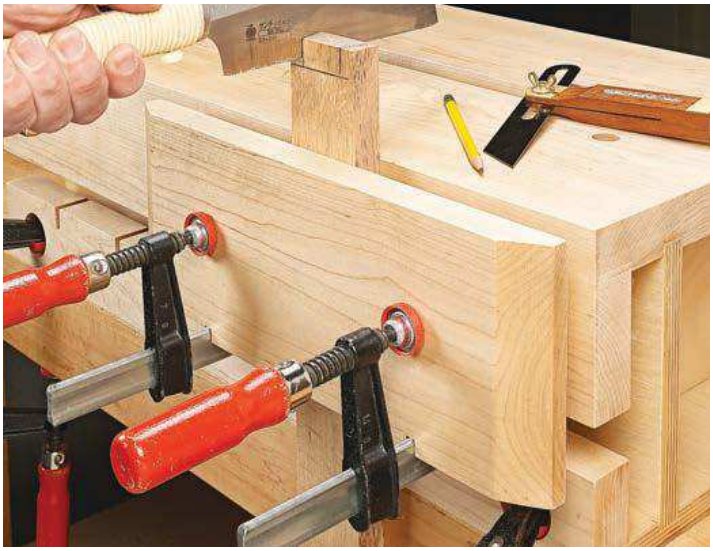

▲ Hardwood jaws have notches to register on bar clamps. This makes it easy to slide a workpiece in place and secure it to the front of the bench without a lot of hassle.

▲ A split hardwood top increases access to use common bar clamps for securing small parts flat on the surface for carving, routing, or other detail work.

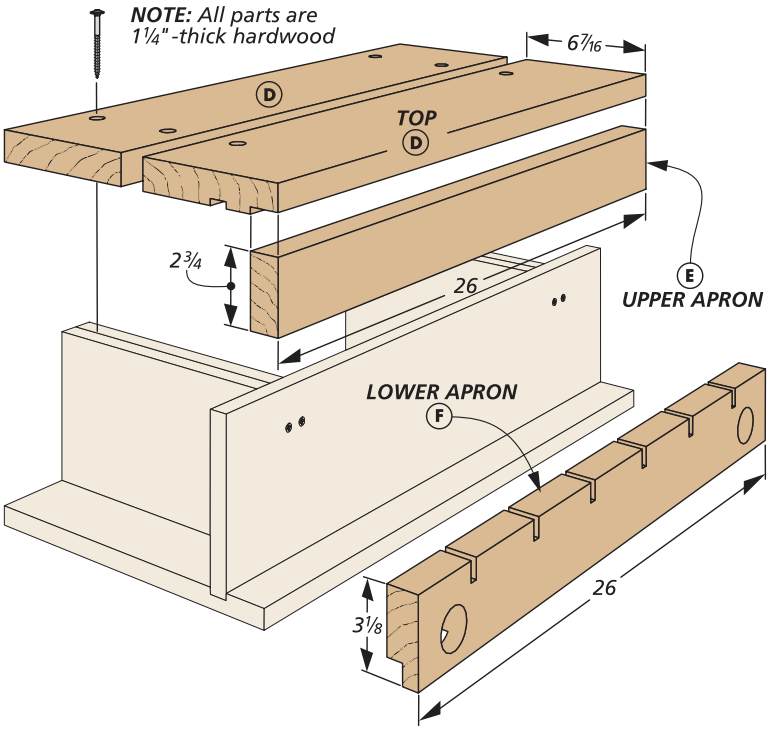

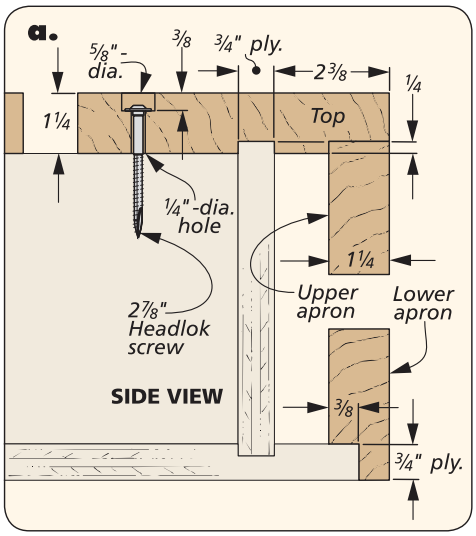

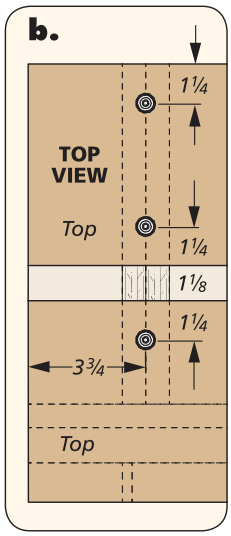

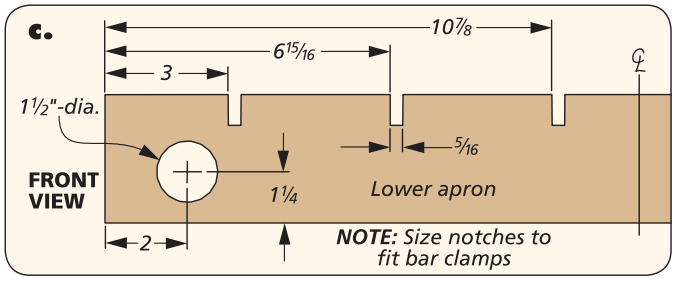

Rugged **TOP & APRONS**

With the plywood foundation in place, it's time to start building out the working surfaces of the benchtop bench. For durability and strength, I chose solid wood (hard maple) to make these pieces.

Like the base assembly, there's nothing complicated going on here. After cutting the parts to size, only two of the parts have any joinery or other details to add. I'll cover those as we come to them. I started working from the back, across the top and down the front.

TOPS. The two pieces that make up the top are identical in size but differ in a couple of details (drawing above). The one at the back is simply cut to size and attached to the supports with counterbored screws. But these aren't ordinary screws. For a solid connection, I used long, washer-head construction screws (refer to sources on page 67). These have deep threads for a solid grip on the edge grain of the plywood, as in details 'a' and 'b.'

The front top piece requires a little joinery. First, there's a groove that matches the one cut in the base to accept the divider. I used the same dado setup as before to make the cut.

Along the front edge of this piece, you need to cut a rabbet to hold an upper apron, as shown in detail 'a.' This rabbet is 1¼" wide. Rather than make two cuts with a typical dado blade setup, I decided to turn the top on edge, as shown in Figure 1. Attach a tall auxiliary fence to the table saw's rip fence to support the workpiece during the cut.

The upper edge of the divider fits into the groove to serve as one connection point. And two long construction screws at the back lock it in place.

APRONS. Along the front of the bench are a pair of aprons. Like the top, they're separated by a gap to accept bar clamps for clamping a workpiece against the front of

How-To: SLOTS & HOLES

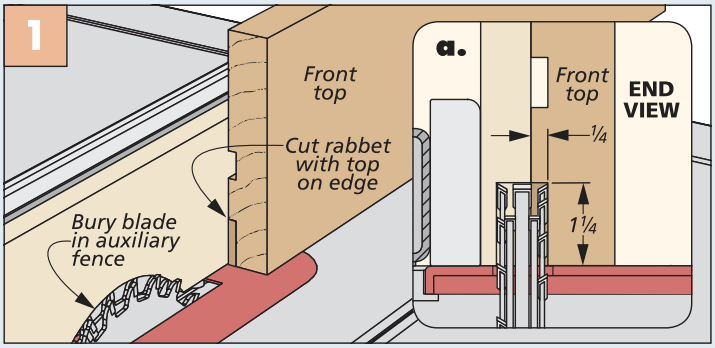

A Wide Rabbet. Recessing a wide dado blade in an auxiliary fence allows you to fine-tune the cut to the correct width. The blade height matches the thickness of the apron.

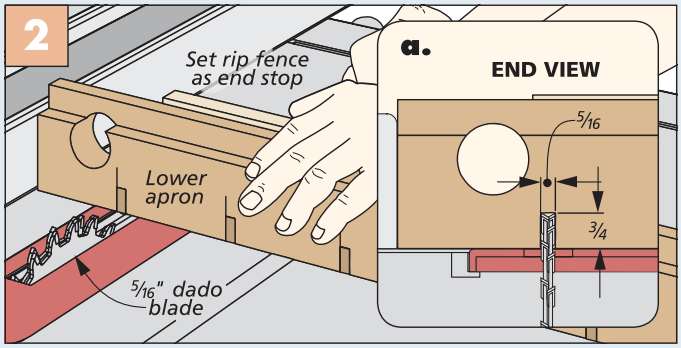

Notches. Cut a notch at one fence setting, then flip the piece end for end to cut a matching notch at the other end. Reposition the fence and repeat for the remaining notches.

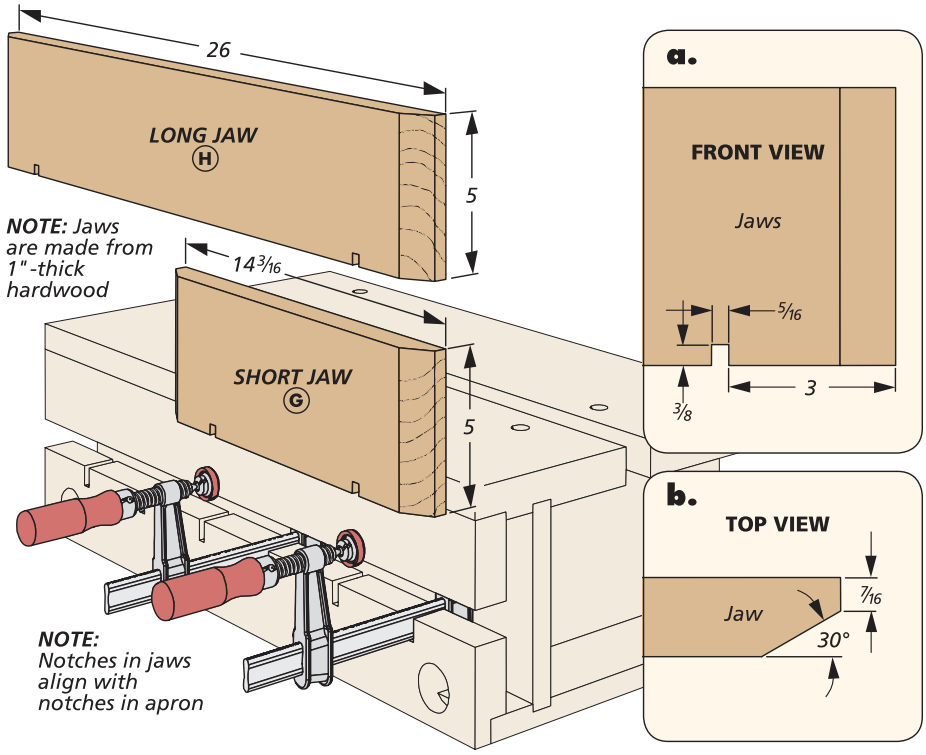

How-To: BEVEL

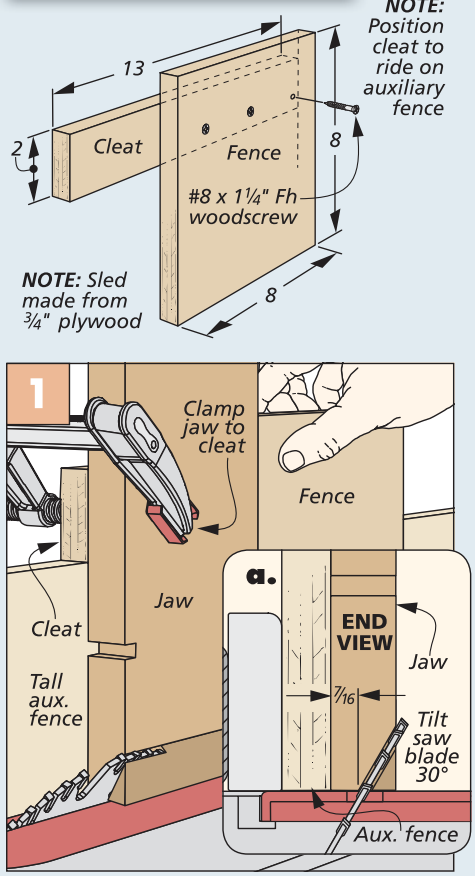

Bevel Guide. This sled supports the jaw while you cut the bevels. The cleat runs along a tall auxiliary fence.

the bench. The upper apron is about the easiest part to make on this project. It's glued into the rabbet at front of the top, as in detail 'a' on the previous page.

The lower apron requires a little more work, but nothing too challenging. It starts with drilling a hole near each end (detail 'c'). This provides access for clamps to secure the bench to a worksurface. Then, the next step is cutting a rabbet so the apron wraps around the base and is flush with the face of the upper apron.

The third step is cutting a series of notches on the upper edge, as shown in Figure 2 on the previous page. They accept the bars of the clamps and hold them upright for ease of use. Detail 'c' on the previous page shows the spacing.

VISE JAWS

The final pieces to make are the jaws. Just like a typical workbench, the jaws distribute the clamping pressure to pin long or wide boards to the front of the bench.

I made two jaws. A short jaw is for clamping narrow parts. The other runs the full length of the bench. Each jaw has a pair of notches that align with notches in the lower apron.

To wrap up, use a sled to cut bevels on the ends of the jaws (box at right). This softens the ends and adds a nice detail.

A couple coats of wiping varnish add warmth and just enough protection to the bench. After that, you can clamp it to the top of your workbench and get to work. I'm sure you'll find it so handy it'll likely stay there most of the time. W

Materials, Supplies & Cutting Diagram

A	Base (1)	3/4 ply. - 13 3/8 x 26
B	Divider (1)	3/4 ply. - 6 1/2 x 26
C	Supports (2)	1 1/2 ply. - 6 x 10 7/8
D	Tops (2)	1 1/4 x 6 7/16 - 26
E	Upper Apron (1)	1 1/4 x 2 3/4 - 26
F	Lower Apron (1)	1 1/4 x 3 1/8 - 26
G	Short Jaw (1)	1 x 5 - 14 3/16
H	Long Jaw (1)	1 x 5 - 26

- (12) #8 x 1 1/2" Fh Woodscrews
- (6) 2 7/8" Headlok Screws

1 3/4" x 7 1/2" - 96" Hard Maple (10 Bd. Ft.)

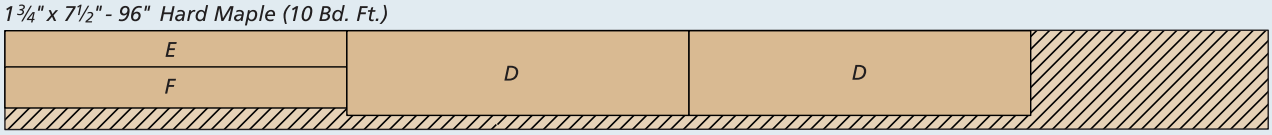

1" x 5 1/2" - 48" Hard Maple (2.3 Bd. Ft.)

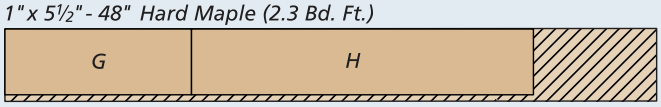

***NOTE:** Parts D, E, and F are planed to 1 1/4" thick*

***ALSO NEEDED:** One 30" x 60" Sheet of 3/4" Baltic Birch Plywood*

Designer Project

Classic Cherry Footboard Bench

Mortise and tenon joinery, double tapered legs, and a comfortable cushioned seat combine to make this an elegant addition to your home.

In most bedrooms, seating is often an afterthought. Besides the bed itself, there are very few options when it comes to a place to sit down. A lot of folks simply rely on an old second-hand chair for their main seating.

The bench shown above creates a more pleasing and comfortable alternative. With gracefully tapered legs and rock-solid traditional joinery, this bench is sure to add beauty to any room setting, as well as adding new skills to your woodworking repertoire.

TIME-HONORED CONSTRUCTION. In designing this bench, I was aiming to use as few mechanical fasteners as possible. To that end, I chose mortise and tenon joinery for much of the project.

It all starts with the leg assemblies. Each end of the bench has three rails held securely between the tapered legs. A pair of long upper stretchers and a beefy lower stretcher connect the end assemblies together. It's then just a matter of adding some hardwood cleats and a plywood seat panel. A store-bought cushion caps things off.

And while I designed this bench with the bedroom in mind, don't feel that you have to limit its placement to this one room of the house. Its fine features would allow it to look right at home in an entryway or mudroom, as well.

Construction Overview / OVERALL DIMENSIONS: 50"W x 22"H x 14"D

NOTE: Before starting the bench, it's a good idea to have the seat cushion on hand to verify the size

Hardwood cleats support the plywood seat panel

The corners of the plywood seat panel are notched to rest inside the legs

The stretchers keep the bench from racking

Double tapers on the inside edges of the legs lighten the look of the bench

End assemblies are constructed using mortise and tenon joinery

◄ Several color options are available for the bench seat cushion. Refer to Sources on page 67 for more information.

Materials, Supplies & Cutting Diagram

A	Legs (4)	1¾ x 2 - 22	**E**	Lower Stretcher (1)	1 x 4 - 49	•	(1) Cushion (2½" x 12" - 48")
B	Upper/Lower Rails (4)	¾ x 1¾ - 12½	**F**	Long Cleats (2)	¾ x ⅝ - 46	•	(20) #8 x 1¼" Fh Woodscrews
C	Middle Rails (2)	¾ x 2½ - 12½	**G**	Short Cleats (2)	¾ x ⅝ - 10½		
D	Upper Stretchers (2)	¾ x 2½ - 48½	**H**	Seat Panel (1)	¾ ply. - 12 x 48		

1¾" x 4½" - 48" Cherry (3 Bd. Ft.)

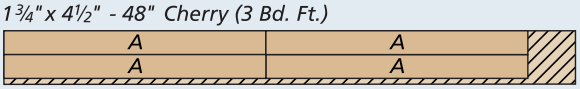

1" x 4½" - 60" Cherry (2.3 Bd. Ft.)

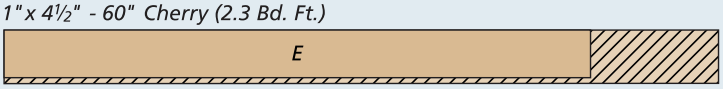

¾" x 6" - 96" Cherry (4 Bd. Ft.)

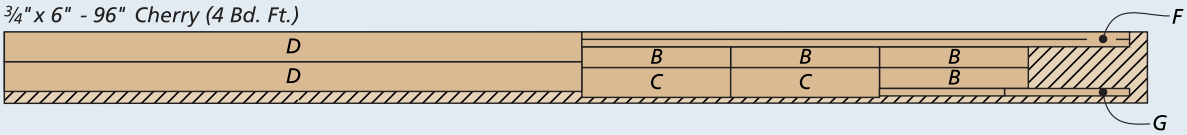

ALSO NEEDED: *One 24" x 48" Sheet of ¾" Birch Plywood*

A solid FOUNDATION

With their gradual tapers and rounded edges, the legs add a point of visual interest to the bench. But these legs are more than just good looks. They also include mortises on their inside faces that accept tenons on the end rails. Another mortise on the adjacent face houses a tenon formed on the ends of the upper stretchers.

LEG BLANKS. For the leg blanks, I used 8/4 stock and planed it to a final thickness of 1¾". Then you can rip the blanks to final size at the table saw. An alternative would be to make blanks glued up from thinner stock. Just make sure the seams are on the sides of the legs.

Whichever option you go with, be sure to select a pleasing grain pattern for the front of each leg. And because each pair of legs is a mirror image of the other, I made sure to label their position to keep things organized down the road.

LAYOUT WORK. Now that the four squared-up blanks are completed, mark the locations of the mortises. Be sure to note that the mortises in the middle of each leg are a little longer than the top and bottom mortises.

CUTTING MORTISES. Figures 1 and 2 below show the process for making the mortises. I'll just point out a couple of things. The single mortise on the inside edge of each leg is deeper than the three mortises on the inside face (detail 'a'). I set the stop on the drill press to a depth of 1" and removed the bulk of the waste for the shallow mortises first. Then it's just a matter of flipping each leg, resetting the drill press stop, and repeating the process. Use a sharp chisel to square up the ends and sides.

TAPERS. The idea of making consistent tapers on the legs may seem a little daunting at first glance, but I've simplified the process by using the taper sled shown in Figure 3 below. This sled will position the workpiece to cut both the long and short tapers simply by rotating the sled and flipping the workpiece

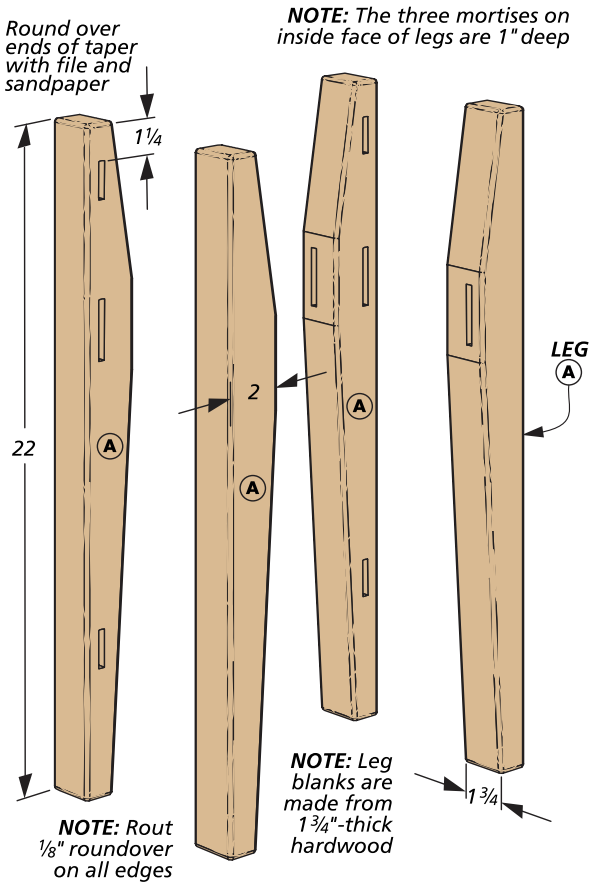

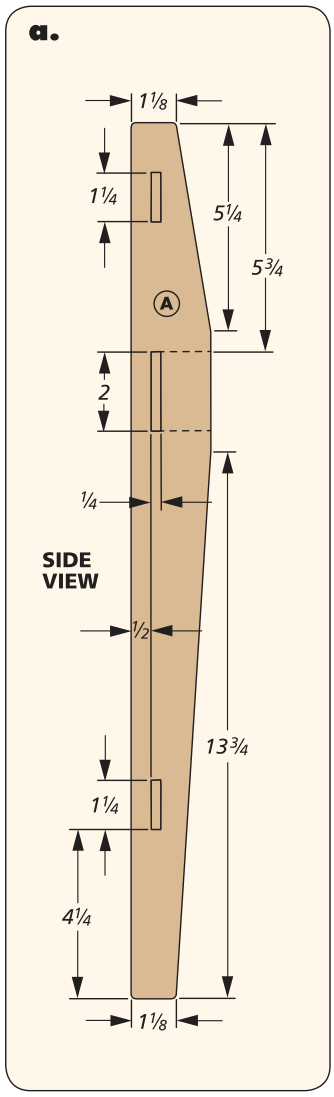

How-To: SHAPE THE LEGS

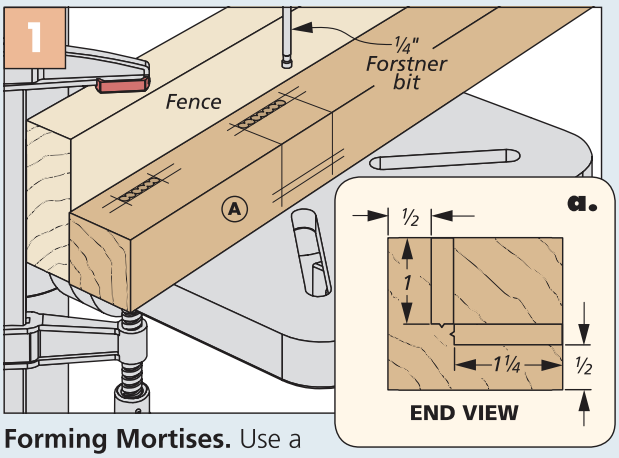

Forming Mortises. Use a ¼" Forstner bit in the drill press to remove the bulk of the waste. Be sure to overlap the holes.

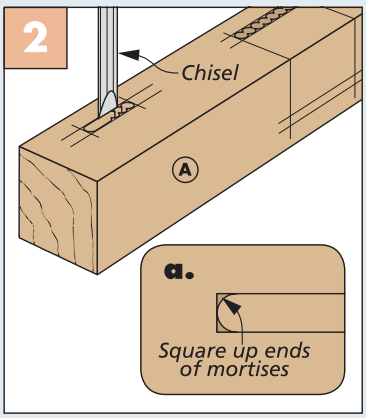

Square Them Up. A sharp chisel is all that's needed to square up the mortises.

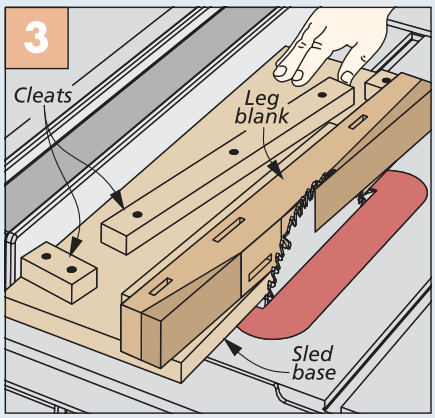

Tapering the Legs. Turn to page 65 to find out how to build and use this simple table saw taper sled.

after the initial cut. Turn to Shop Notes on page 65 to see how to build the sled.

SOFTEN THE EDGES. The final detail on the legs is to round over all of the edges. This is easy enough to do at the router table, with one exception. The tapered ends at the top and bottom are no longer at 90°. Because of this, you'll need to round over these edges using a file and clean them up with sandpaper.

MAKE THE RAILS

After completing the legs, the three connecting rails for each end assembly are up next. Start by cutting the workpieces to size. Note that the middle rail is slightly wider than the upper and lower rails.

CUTTING TENONS. As shown in Figures 1 and 2 below, I used the table saw to form the tenons on the ends of each rail. Since the cheeks and edges of the tenons are cut to the same depth, this requires only one setup and goes pretty quickly.

The rip fence acts as a stop when making the shoulder cuts. Then make another pass to remove the rest of the waste. A shoulder plane or sanding block can be used to fine-tune the tenons for a snug fit in the mortises.

ONE MORE MORTISE. The lower rails each receive a shallow mortise on the inside face (Figure 3). These mortises hold the lower stretcher. To make these mortises, use the same method that you did on the legs. Just be sure not to go too deep to avoid drilling through the workpiece.

ROUNDED RAIL EDGES. With all of the joinery complete, head back to the router table to round over all four edges of the rails, with the exception of the middle rails. Leave the bottom, inside edge of these square. You'll attach the cleats flush to the bottom edge later on.

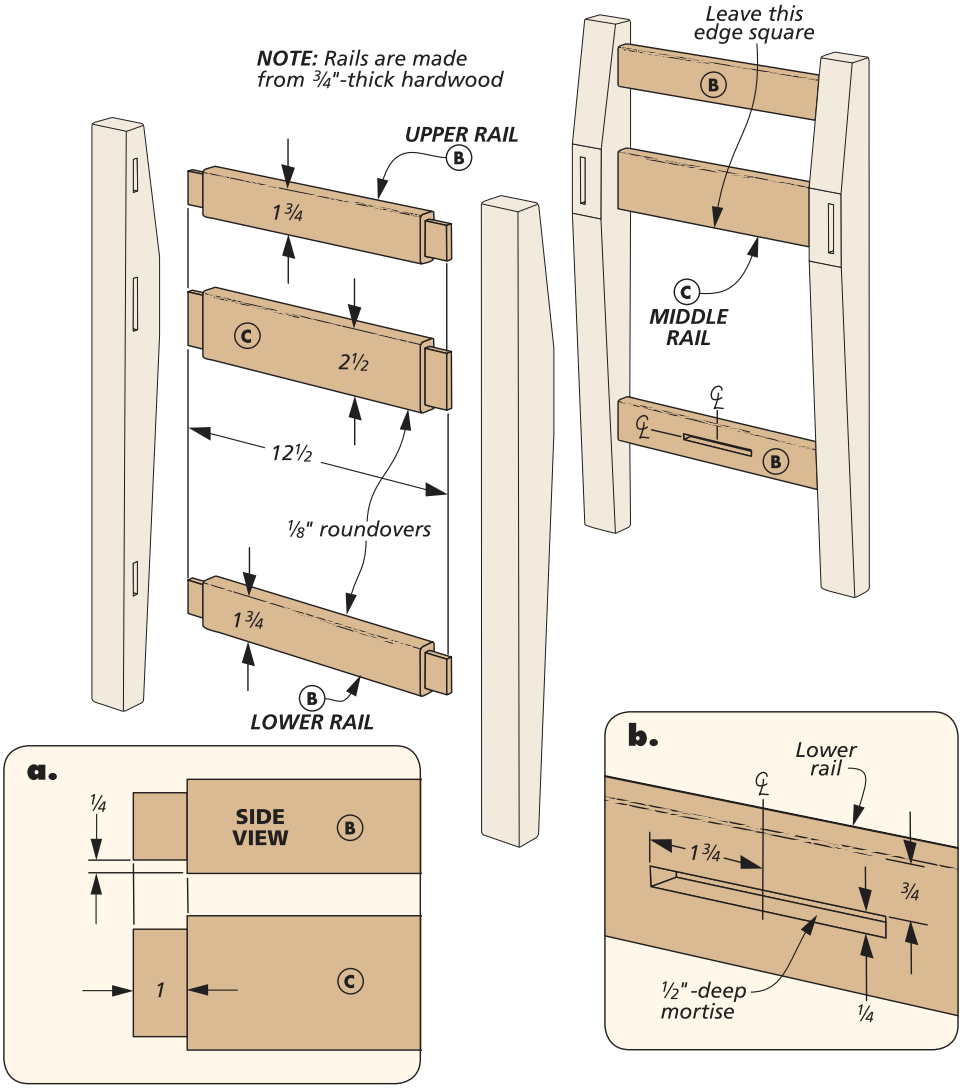

TWO END ASSEMBLIES. Bringing the rails and the legs together is a pretty straightforward process. I would recommend doing a dry assembly before adding the glue. If everything fits nicely, add some glue and clamp the parts together.

How-To: MAKE THE RAILS

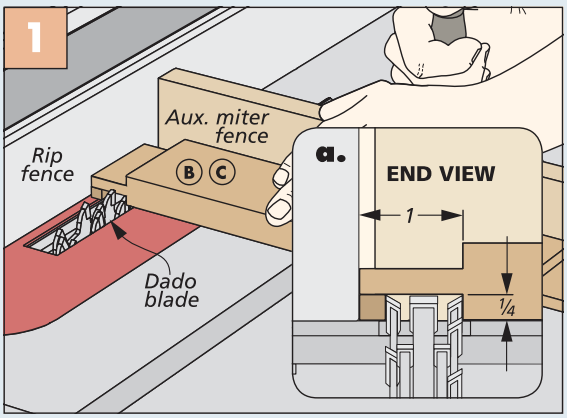

Rail Tenons. A dado blade works well to form the tenons. Register the workpiece against the rip fence to make the shoulder cuts (detail 'a').

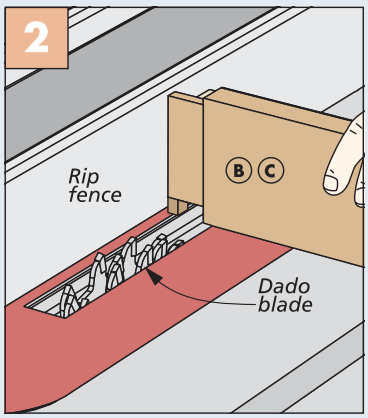

Tenon Edges. Using the same setup, stand the workpiece on edge to finish the tenon.

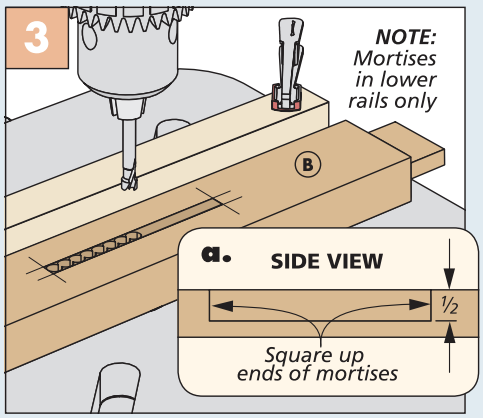

Rail Mortises. Use the same technique that you did on the legs to form the shallow mortises on the lower rails.

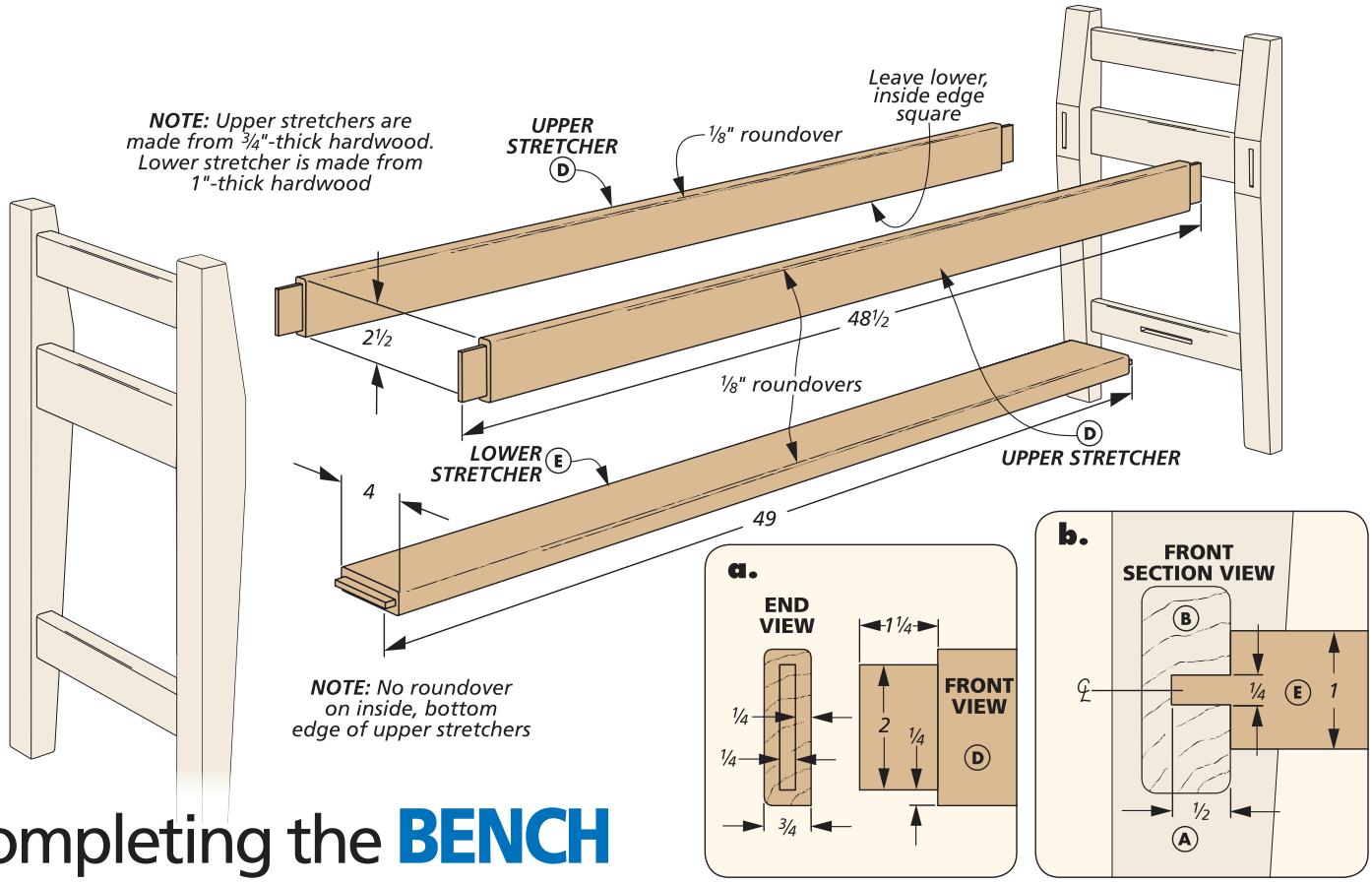

Completing the BENCH

While the end assemblies are still in the clamps, you can turn your attention to the parts that connect them. This includes a pair of upper stretchers and the beefy, lower stretcher. After that, you'll only need to cut a seat panel to size, add some cleats for the panel to rest on, and drop the cushion in place.

MAKE THE STRETCHERS. As I said, the three stretchers combine to tie the ends together. The upper stretchers also serve as a place to secure the cleats for the seat. You'll start by cutting these three parts to size. Be sure to note that the lower stretcher is made from 1"-thick stock.

MORE TENONS. After completing the end assemblies, you're pretty familiar with making tenons on the table saw. The setups are shown in Figures 1 and 2 below. Just be mindful of a couple of things. First, since the stretchers are long, it's a good idea to use a long auxiliary miter gauge fence to support the workpieces through the cut.

Second, notice that the tenons on the ends of the lower stretcher are shorter than the tenons on the upper stretchers (details 'a' and 'b', above). And the lower stretcher also requires a slightly higher blade setup to make the cheek cuts.

ROUNDOVER EDGES. With the tenons out of the way, you'll head back to the router table to roundover all of the long edges on the stretchers, again with one exception. Leave the inside, bottom edge of the upper stretchers square. The cleats will rest flush with the bottom edge.

CLAMP THINGS UP. Now's a good time to do any final sanding and test fitting before

How-To: ADD RAILS & STRETCHERS

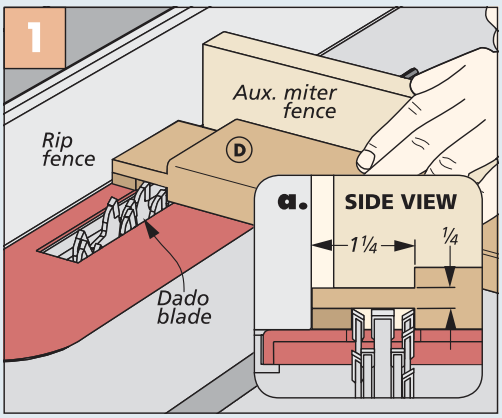

Upper Stretcher Tenons. Using the same method as you did for the rails, form the tenons on the stretchers.

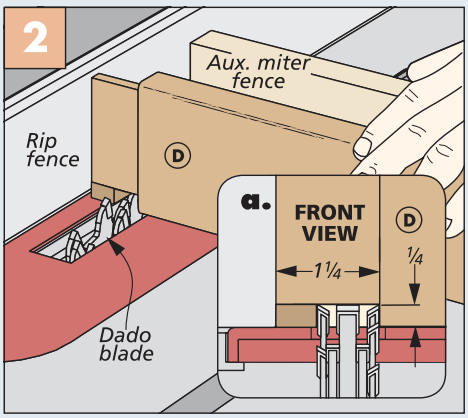

Finish Up. After making the face cuts, flip the workpiece on edge to complete the tenon in a couple of passes.

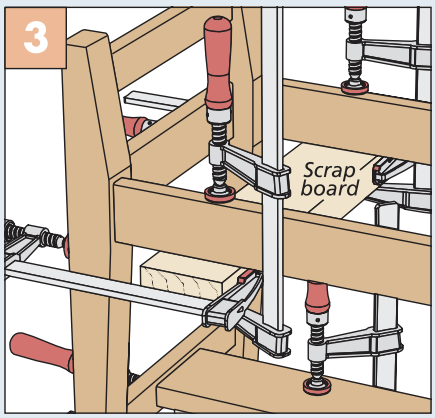

Creative Clamping. A short scrap board clamped to the rails acts as an anchor point to assemble the bench.

gluing the stretchers between the end assemblies. And be sure the square edge of the upper stretchers is oriented correctly. Because the bench is longer than the pipe clamps I had on hand, I used a scrap board and some short clamps to hold the bench together. Figure 3 on the previous page shows what I mean.

CLEATS & SEAT PANEL

You're in the home stretch now. There are just a few details left to complete the bench. The first of those is to make the cleats that support the seat panel.

CLEATS. The cleats are just narrow strips of hardwood. Rip them to size and round over the lower inside edge of each one. I then drilled holes in each cleat for the seat panel and attached them flush with the bottom edge of the upper stretchers using only screws (detail 'b'). To keep the cleats flush with the bottom edge of the stretchers while I screwed them in place, I clamped a support board to the stretchers (Figure 1) to act as a helping hand.

SEAT PANEL. The seat panel will be out of sight once the cushion is in place, so the type of plywood used isn't critical. I opted to use a piece of inexpensive birch for my bench. To get a good fit, measure the top opening between the middle rails and stretchers and cut the panel to size.

NOTCH THE CORNERS. As you can see in detail 'a' at right, the inside corner of the legs prevents the seat panel from just dropping into place. The solution here is to cut a notch at each corner. First, lay out the notch location and drill a ¼"-dia. hole in the corner (Figure 2, below). Then finish each notch with a back saw, as shown in Figure 3.

FINISH UP. With the panel completed, simply drop it in position on the cleats and hold it in place with screws. At this point, I applied a finish to my bench. (Refer to Sources on page 67 for more information.) With the seat cushion in place, this bench is ready for use. W

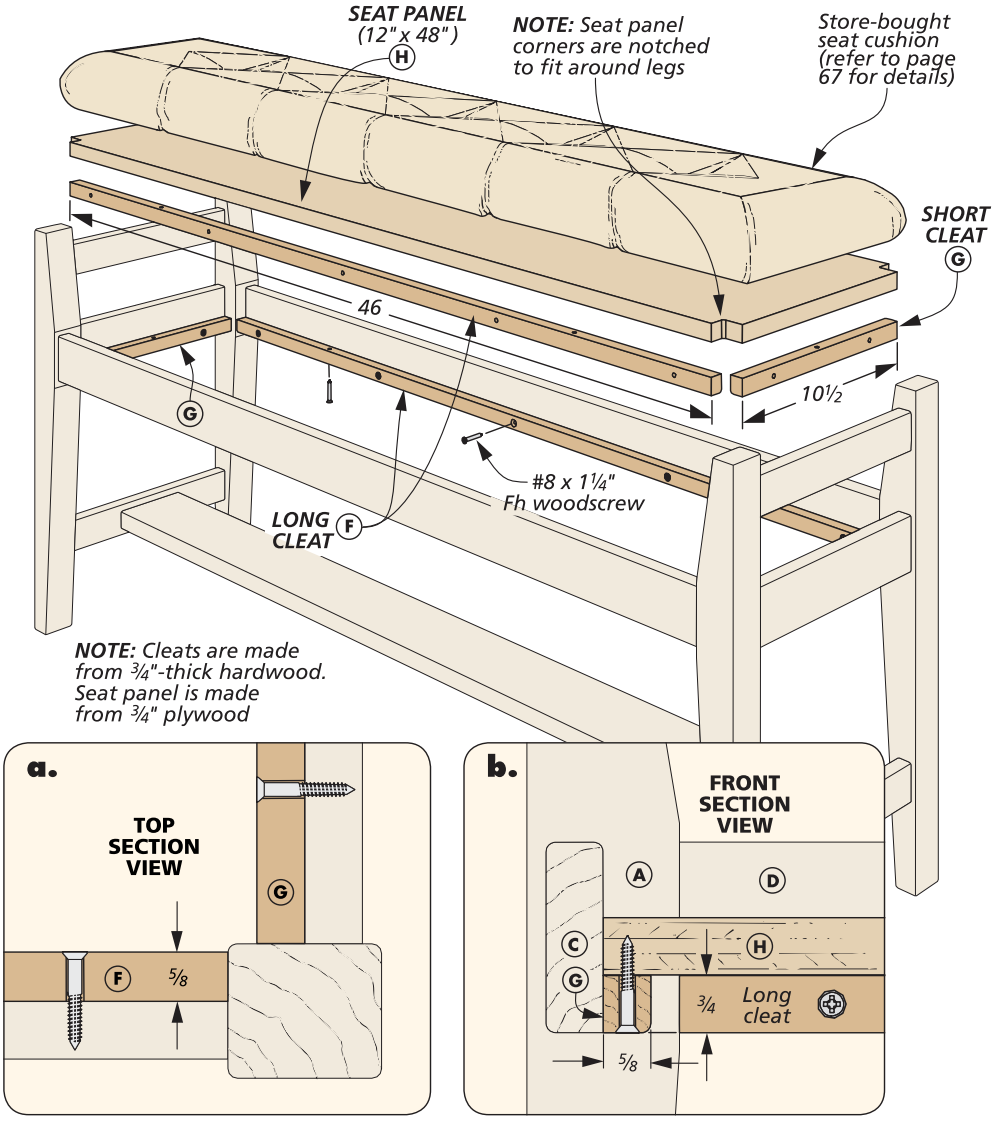

How-To: INSTALL CLEATS & SEAT PANEL

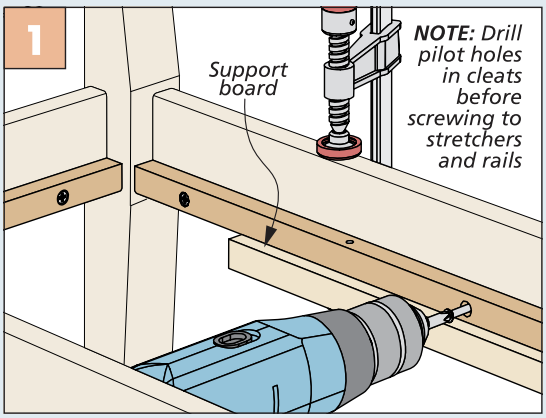

Support. A long, straight board clamped to the stretchers keeps the cleat flush with the bottom edge while it's screwed in place.

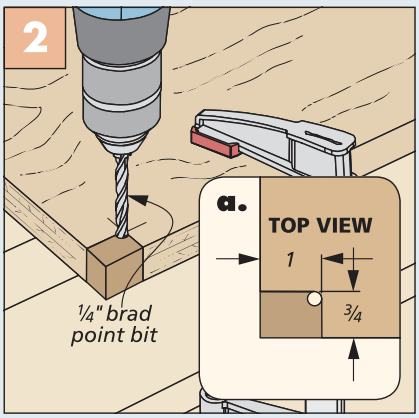

Form the Notches. After laying out the location of each notch, drill a hole in the inside corner.

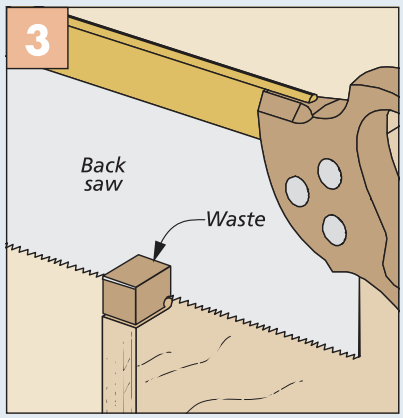

Complete the Notch. Remove the rest of the waste for each notch using a sharp back saw.

Shop Project

Lathe-Driven Belt Sander

Transform your lathe into a handy sanding station with this key add-on.

The lathe in my shop sees a fair amount of use. But when I'm not turning, it just sits there collecting dust. One day it occurred to me that I could put it to use for other tasks. The belt sander you see here is a result of that revelation.

The belt sander clamps onto the bed of the lathe. The lower roller mounts directly to the lathe spindle for power. Sliding the tailstock with a live center up to the opposite end of the roller provides support as the roller spins.

The ingenious part of the belt sander is the mechanism that provides tension and tracking for the belt. A pair of compression springs and a lever-operated cam assembly provide the proper amount of tension to keep the belt tight. And a studded knob at the top of the belt sander makes it a simple task to adjust the belt to keep it perfectly centered.

At first it may appear to be a complicated project, but I'll break it down into manageable assemblies. It's really pretty simple when you take it one step at a time. As you put it together, you'll have a better understanding of how it works.

The plywood construction and heavy-duty joinery means the sander will stand up to regular use. And you can even get more use out of your lathe.

Construction Overview / OVERALL DIMENSIONS: 16"W x 31⅛"H x 12¼"D

NOTE: For hardware and finish sources, turn to page 67

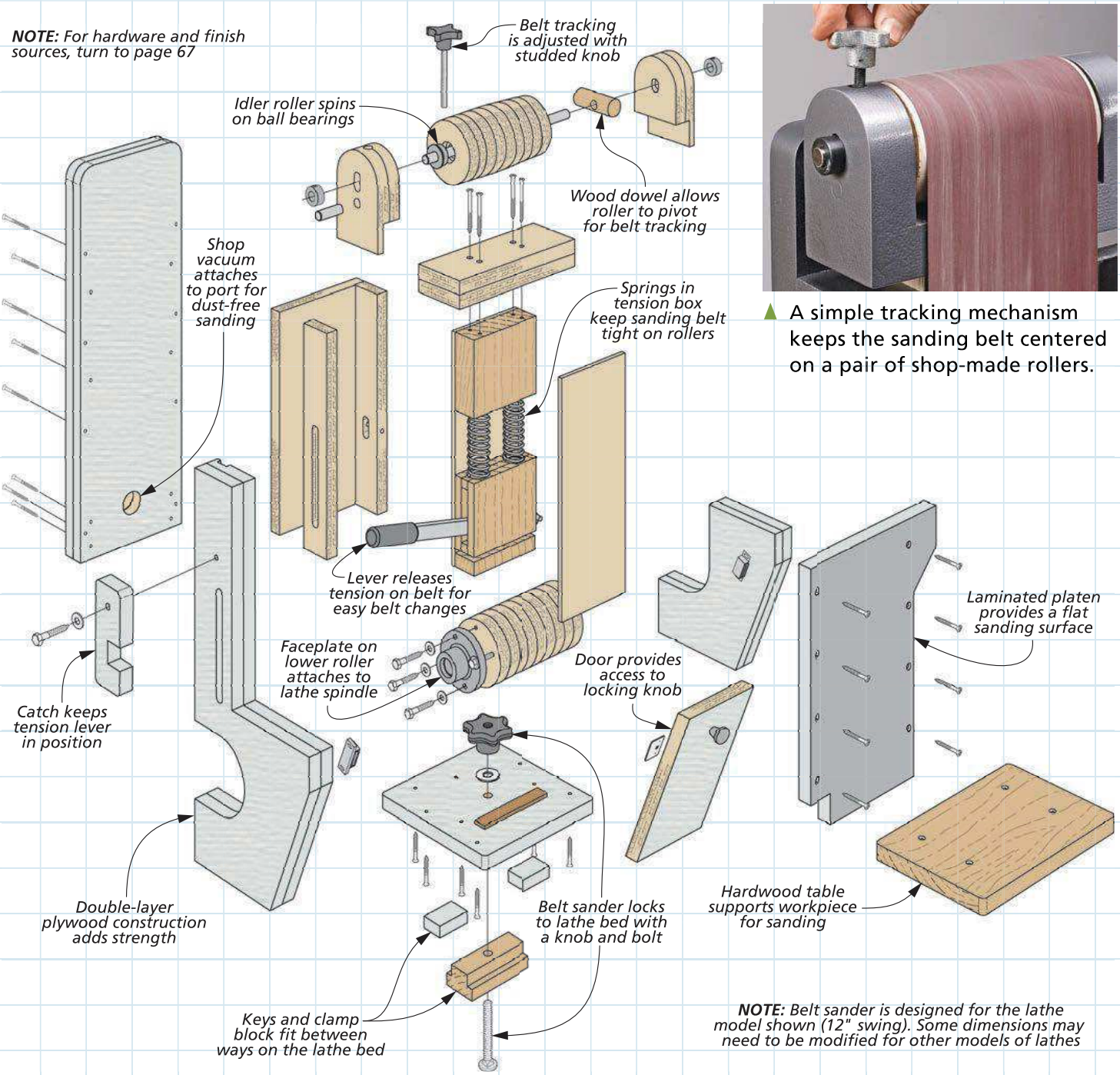

▲ A simple tracking mechanism keeps the sanding belt centered on a pair of shop-made rollers.

***NOTE:** Belt sander is designed for the lathe model shown (12" swing). Some dimensions may need to be modified for other models of lathes*

▲ The clamping block is an oversize, shop-made T-nut that fits between the ways on the lathe bed.

▲ Your lathe supplies power to the sander by using a dedicated faceplate mounted on the spindle.

▲ A live center in the tailstock supports the opposite end of the drive roller for smooth operation.

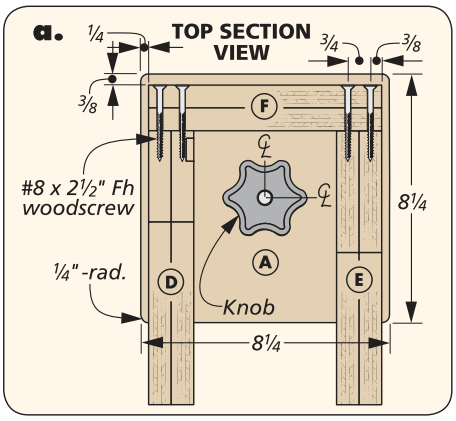

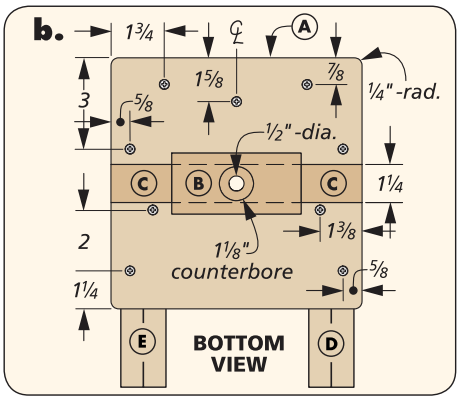

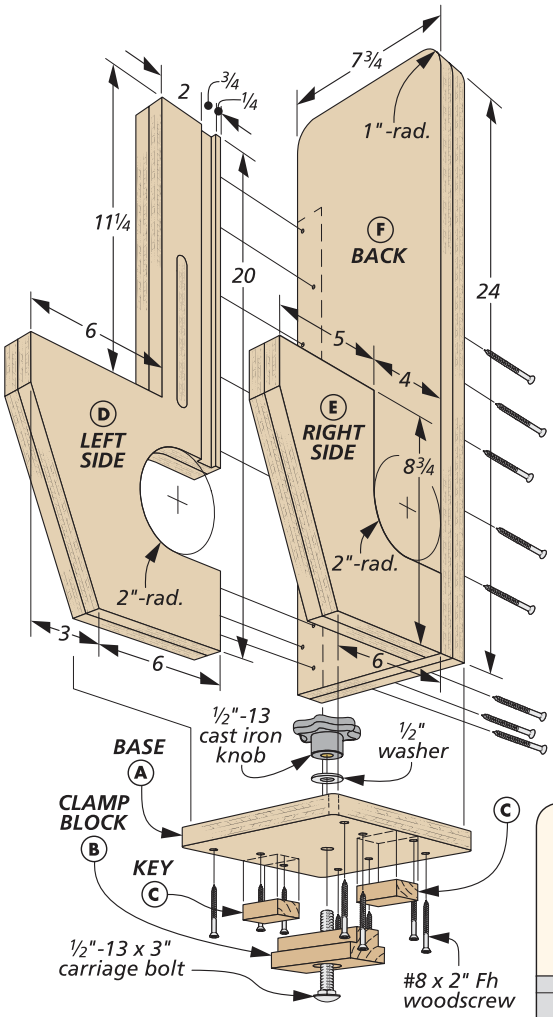

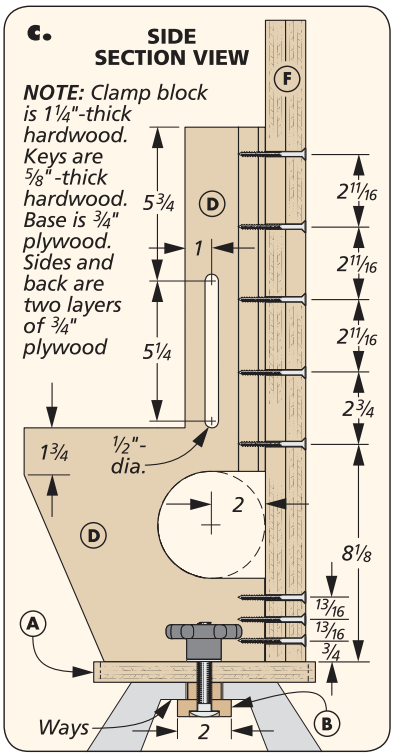

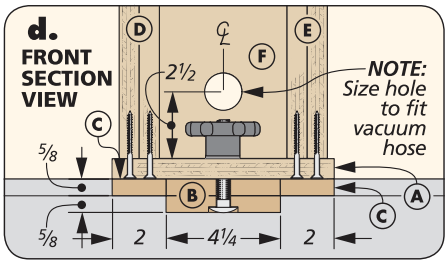

Build the **BASE**

Construction of the belt sander starts with the base. You'll build up from there. The base serves as a platform for the sides and back that form the main structure of the sander. The sides have a rounded notch to accommodate the lower roller that attaches to the lathe spindle.

A LOCKING BASE. The drawing above shows the base and clamp block assembly. This, in combination with two hardwood keys, keeps the base secure and aligned between the ways on the lathe's bed. A knob and washer on a carriage bolt lock it in place.

Cut the base to size before rounding the corners and drilling holes for the screws that secure the sides and back. There's also a center hole for the carriage bolt, as you can see in the drawings above.

The clamp block is an inverted "T" shape you'll size to fit between and under the ways on the lathe bed. The two keys fit snugly between the ways and prevent the base from rotating during use. They're glued to the bottom of the base. Position the base under the spindle and clamp the base to the lathe with the knob and washer. This positions it to mark the notch location in the sides a little later.

How-To: MEASURE & SHAPE THE SIDES

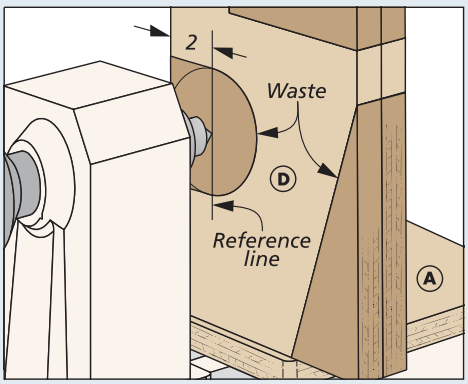

Marking the Center. Place the blank for the left side on the base and slide the assembly against the lathe center.

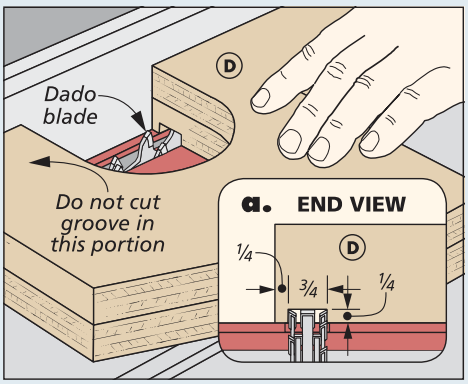

Groove for Slide Support. Position the notch over the dado blade, then cut a groove along the back edge.

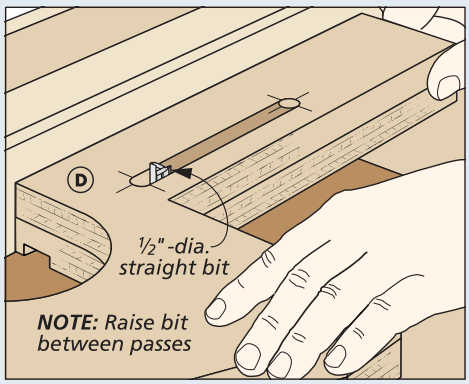

Routed Slot. Drill out the ends of the slot, then make several passes at the router table to remove the waste.

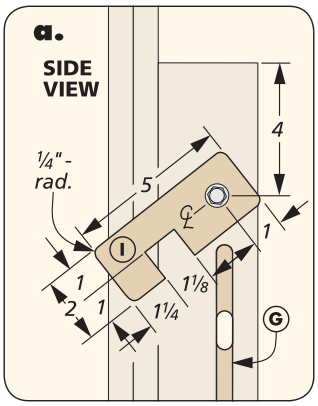

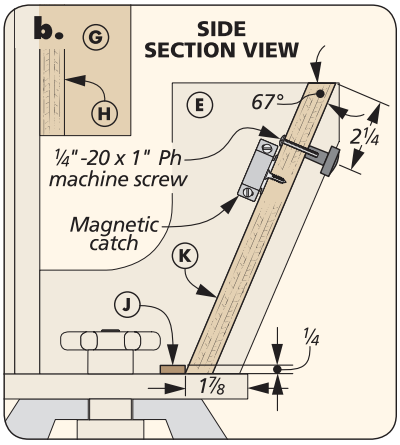

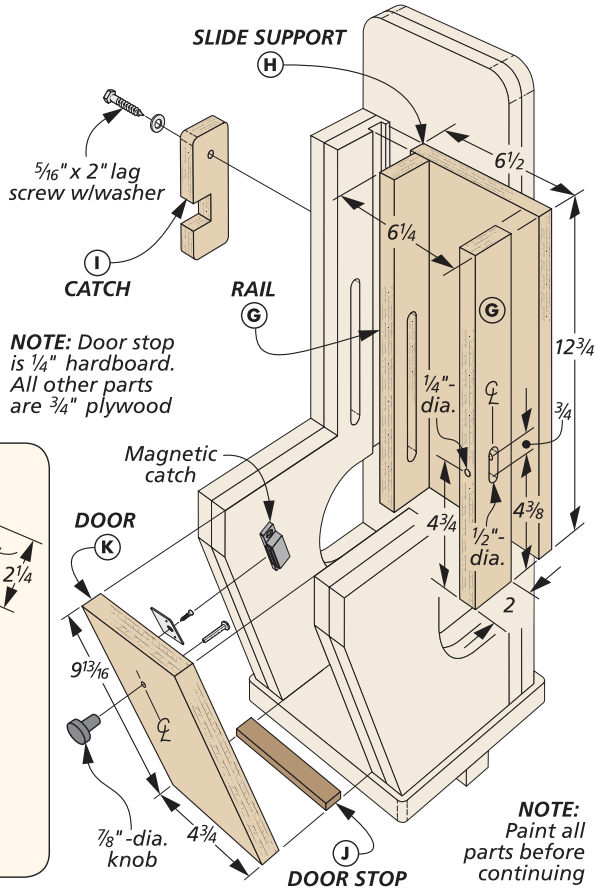

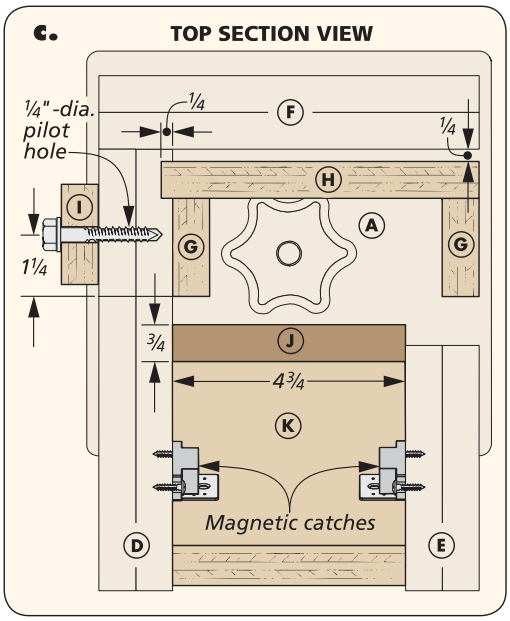

LEFT SIDE. The sides and back of the sander are made from two layers of plywood. After gluing them up, cut each piece to overall size.

To locate the centerpoint for the notches in the sides for the lower roller, draw a reference line parallel to the back edge. After installing a lathe center in the spindle, place the blank for the left side on the base with the line aligned on the center (lower left drawing, previous page). Mark the location by pressing it onto the lathe center. With the centerpoint established, lay out the remaining shape and cut it at the band saw.

A groove cut along the back, inside edge serves as a key joint to strengthen the assembly that houses the tensioning mechanism. I cut the dado at the table saw, as in the center drawing at the bottom of the previous page.

The long slot on the left side is where the lever resides for tensioning the belt. To make the slot, drill the two ends then rout out the waste at the router table (lower right drawing, previous page).

RIGHT SIDE. The right side of the sander is a cut-down version of the left side. Use the left side as a pattern to lay out the angled front edge and lower portion of the notch before cutting it to shape, as in the main drawing.

BACK. Making the back of the sander is pretty simple. Just round over the two upper corners and drill a hole sized to fit the hose on your shop vacuum (detail 'd'). To assemble the base, back, and sides, I used glue and screws, as detailed on the previous page.

RAILS & SLIDE SUPPORT

Two rails and a slide support provide the platform for the tension mechanism you'll build later (drawing above). The sanding belt travels between the slide support and the back of the sander.

The left rail is slotted to match the slot in the left side, as in the first drawing at left. As shown above, the right rail has a short slot to hold the end of the tension lever. And you'll need to drill a hole on the front edge of this rail to hold a steel pin that locks the lever in place.

Glue the right rail to the slide support first. Then glue and clamp the left rail and slide support to the left side of the sander, as illustrated in detail 'c' above.

DOOR & CATCH. A simple door directs dust to the vacuum port. The ends are beveled to match the angle of the sides. The door fits against a hardboard stop and magnetic catches (detail 'c').

A plywood catch holds the lever in place when the belt is tensioned. I cut it from a long blank, as shown at left.

How-To: ADD THE RAILS & LEVER CATCH

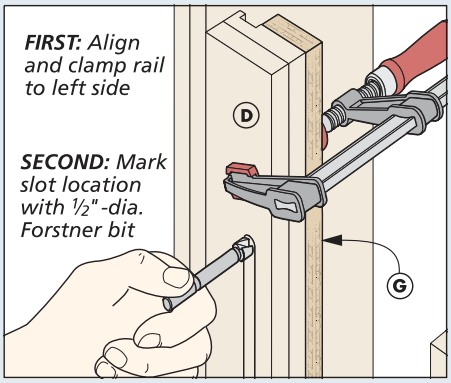

Marking the Slot. The left side acts as a template to mark the ends of the slot in the left rail using a drill bit.

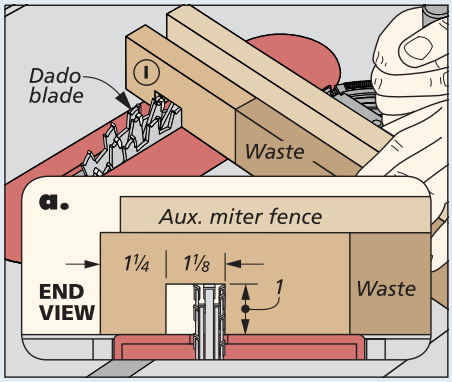

Lever Catch. Cut a dado for the catch in an extra-long workpiece, then cut the catch to its final length.

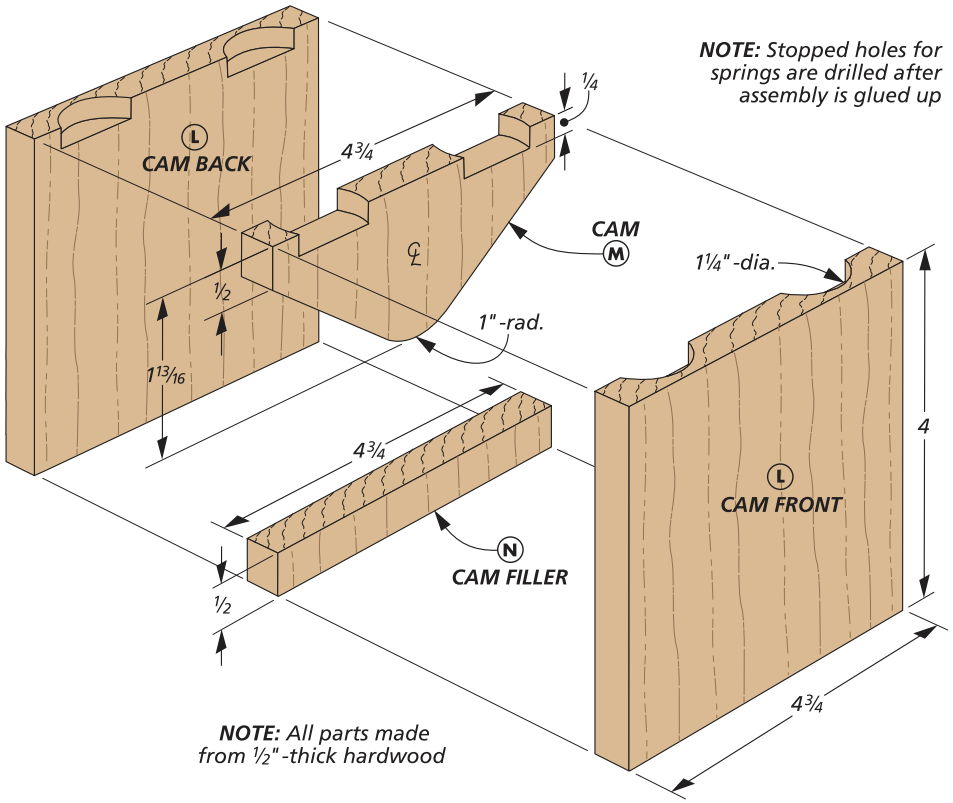

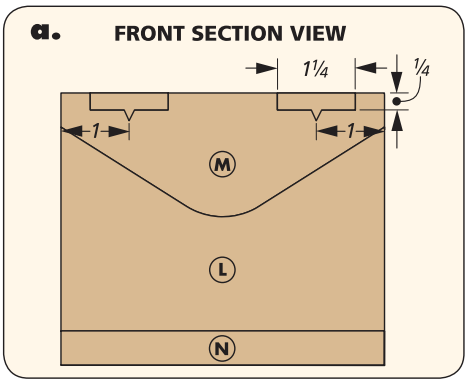

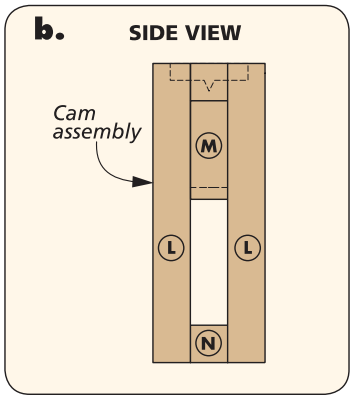

Assembling the TENSION BOX

The main supporting structure of the belt sander is complete. Now you'll turn your attention to the mechanism that applies tension to the sanding belt. It allows you to easily change the belts.

The drawings on this and the next page provide an overview of how the tensioning mechanism works. To start, you'll build the cam assembly shown above. This assembly slides freely inside the tension box shown on the next page. The tension lever passes through the cam assembly and pivots on the right rail. A pair of compression springs between the top of the cam assembly and the top of the tension box apply pressure to the upper roller you'll add later. This complete tension box assembly slides between the rails of the sander.

CAM CONSTRUCTION. As shown above, the cam assembly consists of three layers of ½"-thick hardwood. The middle layer is shaped to form the cam. A small filler completes the sandwich. Shaping the cam is an easy task at the band saw, as illustrated in the left drawing in the How-To box below.

When gluing up the four parts of the assembly, it's important to keep all the outside edges flush. Driving small brads into the two center parts and clipping off their heads will help prevent the parts from slipping around on the wet glue.

The two compression springs fit into stopped holes in the top of the cam assembly. After the glue is dry, sand the edges smooth and drill the pair of holes in the top edge with a Forstner bit, as you can see in the right drawing below.

How-To: BUILD THE CAM ASSEMBLY

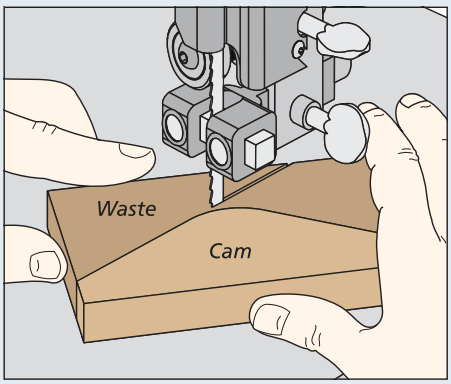

Shaping the Cam. After laying out the profile on the blank, cut the cam to shape and sand it smooth.

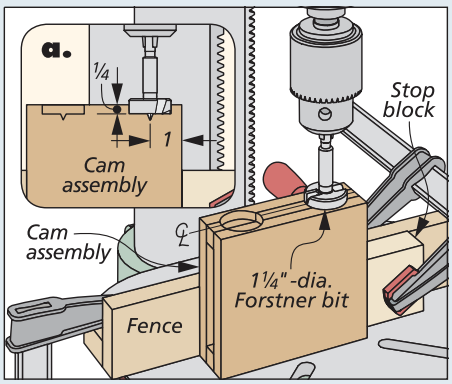

Stopped Holes. Drill the pair of holes for the compression springs after the cam assembly is glued up.

TENSION BOX ASSEMBLY

The tension box shown on the next page is comparatively easy to build. Two plywood skins are glued to a hardwood top and bottom. The only task before glueup is to drill another pair of stopped holes on the bottom edge of the box top (lower left drawing on the next page). These holes mirror those on the cam assembly.

Once the glue is dry, slip the cam assembly inside the tension box. Just make sure it can slide up and down easily between the plywood front and back. If it's a little snug, sand the front and back of the cam assembly while checking the fit. To allow for changes in humidity, a slightly looser fit is better.

A SIMPLE LEVER. Before you can add these parts to the sander, there's one more

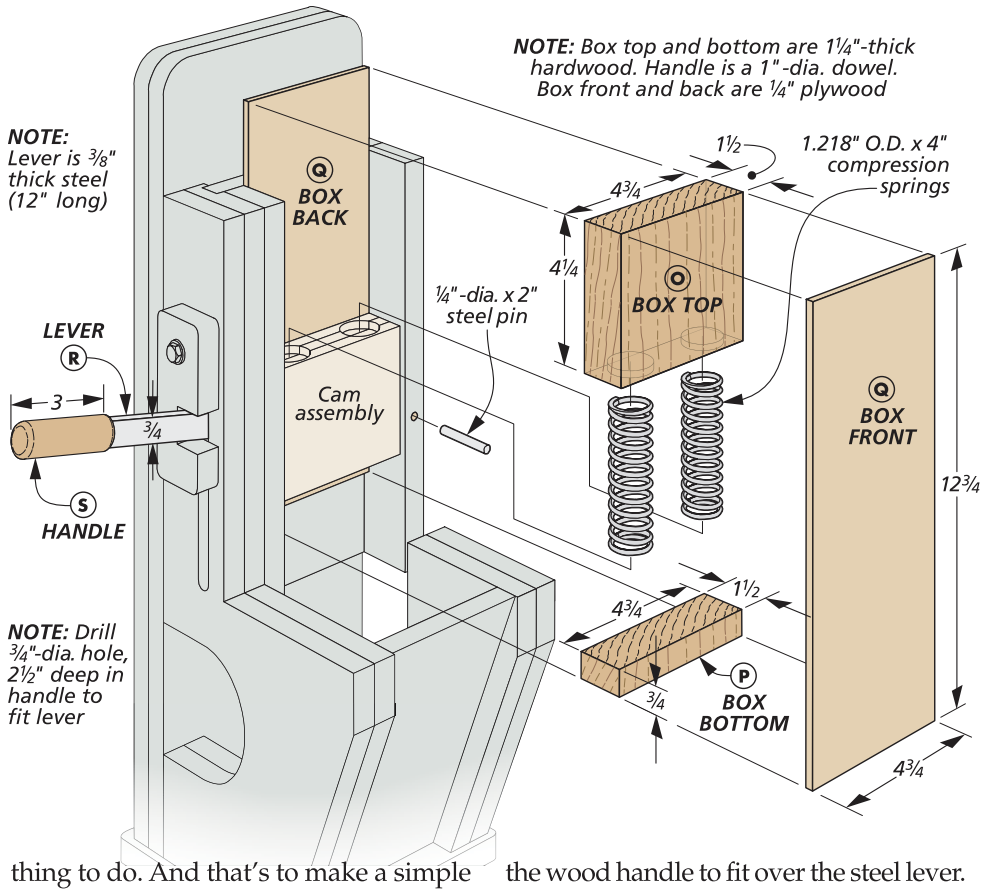

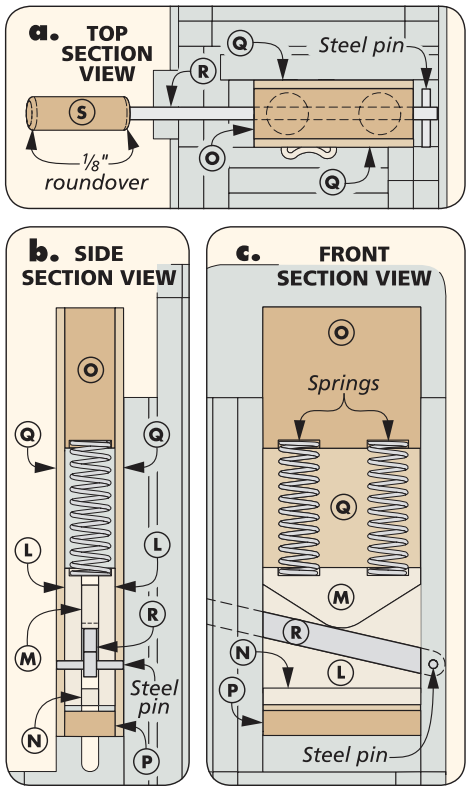

thing to do. And that's to make a simple lever that compresses the cam assembly against the springs, which in turn forces the tension box upward to apply tension to the sanding belt.

There's quite a bit of tension involved here, so I made the lever out of a piece of ⅜"-thick steel. I drilled for the steel pin used to hold it in place and then shaped one end with a radius at the grinder.

The handle is nothing more than a short length of 1"-dia. dowel. I used a file to round over the sharp corners of the steel lever where the handle attaches. Then drill a stopped hole in one end of the wood handle to fit over the steel lever. You'll want a snug fit, but not so snug that you have to pound on it and risk splitting the handle. Keep filing the steel lever until the handle fits. Then apply epoxy and slip the handle in place.

To hold the lever in place in the sander, you'll need to cut a length of ¼"-dia. steel rod to serve as a pivot pin. To help repel dust and grit during use, I also took the time here to spray a couple coats of lacquer on the cam and box assemblies.

ASSEMBLING THE MECHANISM. Installing the cam and tension box assemblies and adding the lever starts with the cam assembly in the tension box. You'll add the pair of compression springs into the stopped holes in the box top and cam assembly next, as illustrated in detail 'b' above. You may need to use a large, flat-bladed screwdriver to compress the springs enough to slip them between the box top and cam assembly. Work the springs in until each end snaps into a hole, locking them in place.

After slipping the cam and box assembly between the sander rails, slide the lever through the slot in the left rail. It needs to pass through the cam assembly and under the cam block (detail 'c' above). Position the assembly so the hole at the end of the lever is centered over the hole in the right rail where the steel pivot pin will be installed. Tap the pin in place to secure the lever, as in the box at left.

CHECKING THE OPERATION. At this point, you'll want to check to make sure everything is working smoothly. To do this, lift the lever to apply tension to the mechanism. Rotate the catch and make sure it engages the lever completely. You may need to file or sand the notch in the catch to make sure it seats over the lever.

Release the catch and move the lever up and down several times while pressing down on the tension box. The movement of the cam assembly inside the box and the movement of the box between the rails should be nice and smooth.

How-To: ADD THE BOX & LEVER

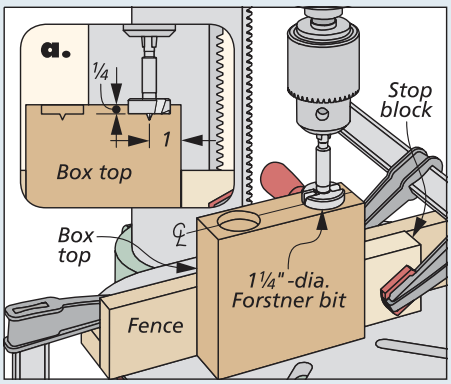

Mirrored Stopped Holes. Drill a pair of holes for the compression springs on the inside edge of the box top.

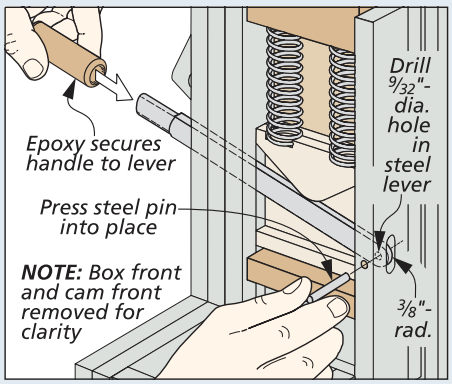

File & Fit. File off the sharp corners of the opposite end of the lever before fitting and installing the wood handle.

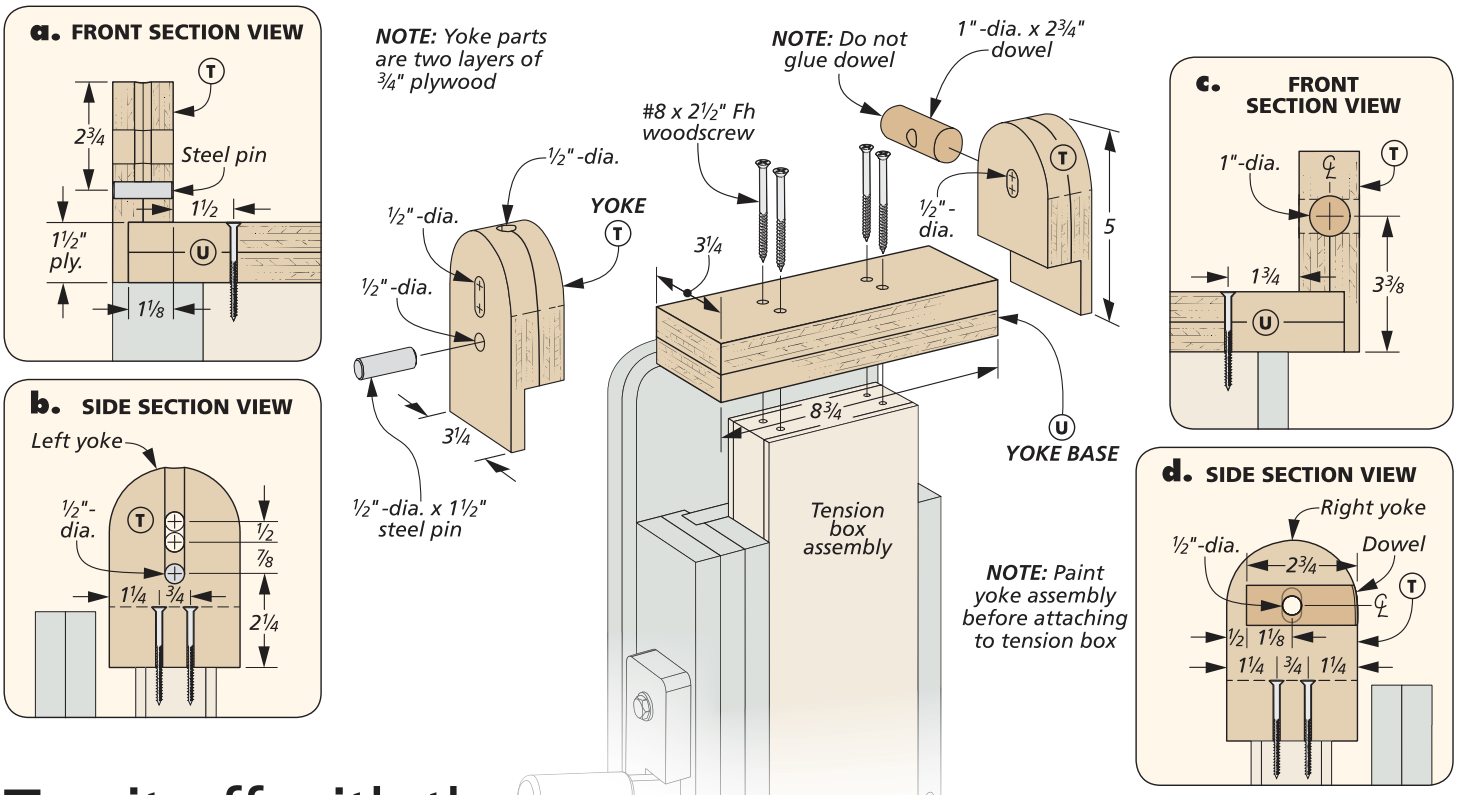

Top it off with the YOKE & ROLLER

The sanding belt travels on two rollers. The rollers are made from glued-up layers of ¾" plywood, as is the yoke assembly that the idler roller fits into. A simple tracking mechanism allows the roller to pivot slightly at one end to keep the belt centered. You'll start by adding the yoke assembly to the top of the tension box.

MAKING THE YOKE. In the drawing above, you can see the pair of yokes and how they're assembled to the yoke base. The three parts are glued up from two layers of plywood and cut to overall size. After cutting the yokes to final length but before shaping them, I drilled all of the holes. The details above show their location and size. The slots were made by drilling overlapping holes with a Forstner bit and filing the slot smooth, as in the lower left drawing.

The rounded ends of the yoke are roughed out at the band saw and then sanded smooth (lower middle drawing). The last step is to cut a rabbet to fit over the end of the yoke base (right drawing). After cutting the yoke base to length, drill the countersunk screw holes. Attach the yokes with glue and then fasten the assembly to the top of the tension box, as shown above. Be sure to center it from side to side, as well as front to back.

ADDITIONAL PARTS. There are a few small parts to add to the yokes. In the right yoke, there's a short length of wood dowel. It supports one end of the roller shaft, so you'll need to drill a hole in the dowel to accommodate the shaft. A V-block at the drill press makes this an easy task. The dowel fits into the yoke without glue so that it can pivot with adjustments in belt tracking.

How-To: BUILD THE YOKE

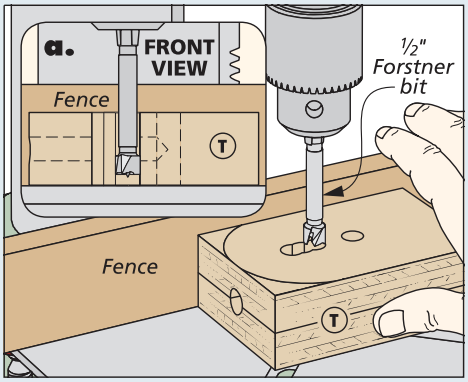

Drilling Slots. Create short slots quickly and easily by drilling overlapping holes then filing the slot smooth.

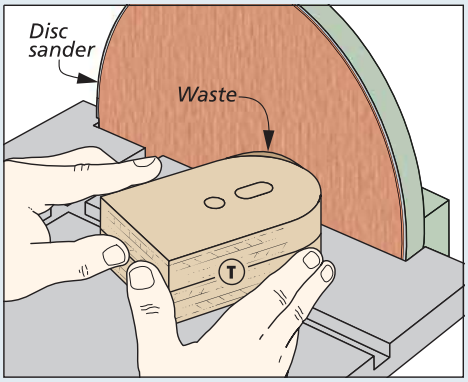

Rounded Ends. Cut the rounded shape on the ends of the yokes at the band saw and then sand them smooth.

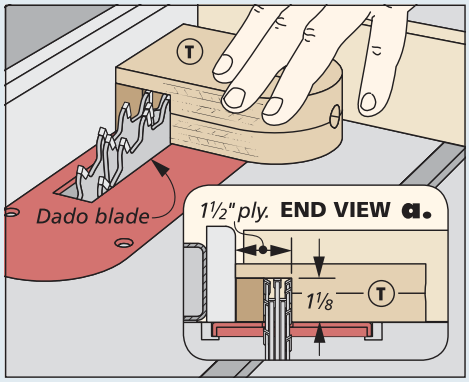

Strong Joinery. Rabbets on the bottoms of the yokes create a lot of glue surface for a strong joint.

On the left yoke, a steel pin acts as a bearing surface for the tensioning knob. This should be a friction fit, but you can add a little epoxy to hold it in place.

IDLER ROLLER

The two rollers are glued up from nine layers of plywood. I started with 3¾"-square blanks. Cut enough blanks for both rollers (18 in all). You can set the blanks for the lower roller aside for now.

Before you glue up the idler roller, the blanks need to be drilled to accommodate the shaft and bearings. Drawing diagonal lines across each blank pinpoints the exact center. Drill a counterbore in the two outer blanks to hold a bearing. Then drill all of the blanks with a ¾"-dia. hole for the roller shaft to pass through.

Once all of the blanks are drilled, it's time for gluing them together. To keep the blanks centered and help with clamping, I used a ¾" x 8" bolt with washers and a nut. Put a coat of wax on the bolt to prevent glue from sticking. Place a washer on the bolt followed by an outer blank with the counterbore facing the washer. For each additional blank, apply a thin layer of glue before sliding it onto the bolt. Finish with the opposite outer blank with the counterbore facing out. Try to keep all of the edges flush as you add each blank. Add another washer and nut to draw everything tight. You can add more clamps after that.

MAKING IT ROUND. At this point, I was faced with a bit of a dilemma — without a solid center, I couldn't figure out an easy way to mount the glued-up blank on the lathe to turn it round. So I came up with a jig to use at the router table (right drawing below). Refer to Shop Notes on page 64 for details on the jig.

The first step in making the roller round is to knock off the corners of the glued-up blank at the table saw, as shown in the middle drawing below. This removes most of the waste before making the roller round using the router jig.

ADDING A CAMBER. In addition to turning the roller round, you'll need to create a slight crown, or camber, in the center. This helps keep the belt tracking on the rollers during use. The router jig helps create this camber by slightly tapering each end of the roller (about 1/16"). A light sanding is all it takes to create a smooth transition between the tapers.

ATTACHING THE ROLLER. You can see above how the roller is mounted to the yoke assembly. But before you do that, cut the steel rod for the roller shaft to length. Then drill and tap a hole for the studded knob. After installing the bearings, placing a washer between each end of the roller and the yoke. Insert one end of the shaft through the wood dowel and add a stop collar. Finally, add the studded knob and the other stop collar.

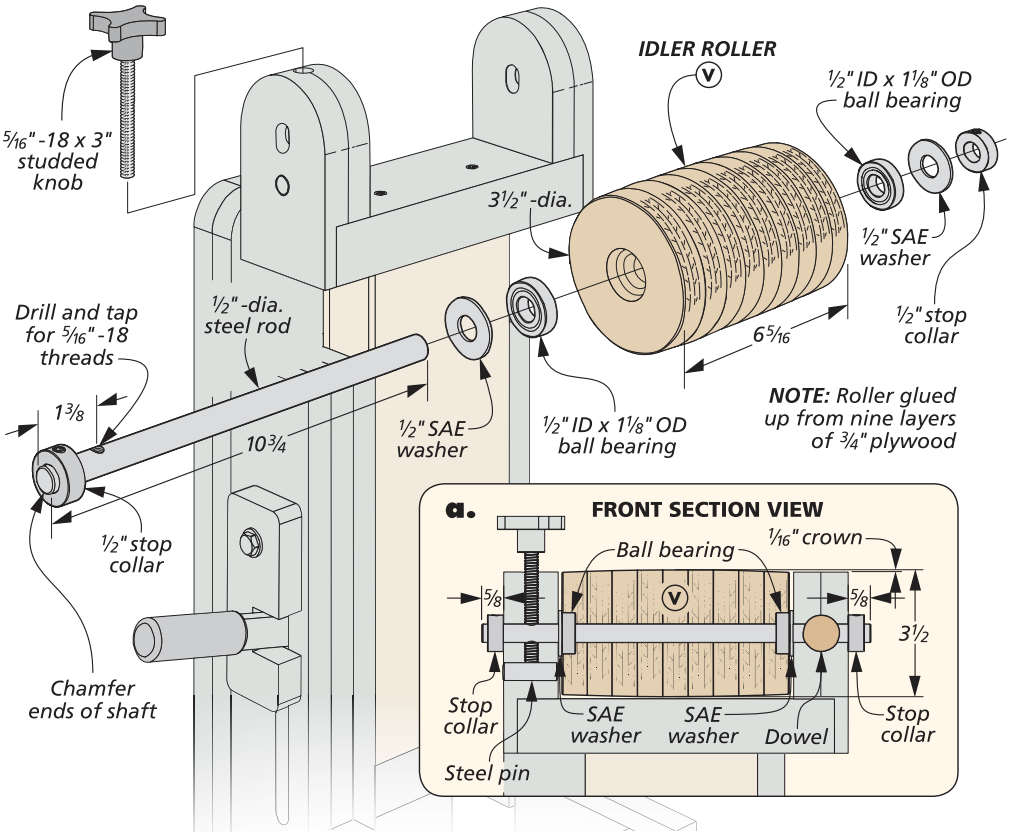

How-To: CREATE THE IDLER ROLLER

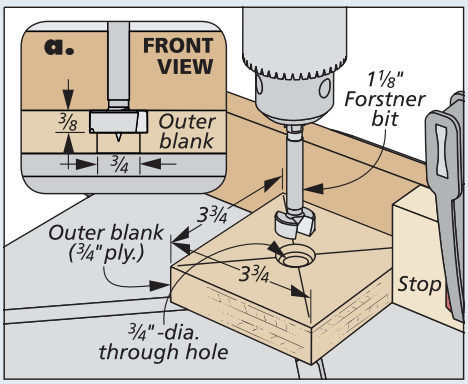

Drilling Blanks. Counterbore the outer blanks for bearings, then drill all of the blanks with an oversized shaft hole.

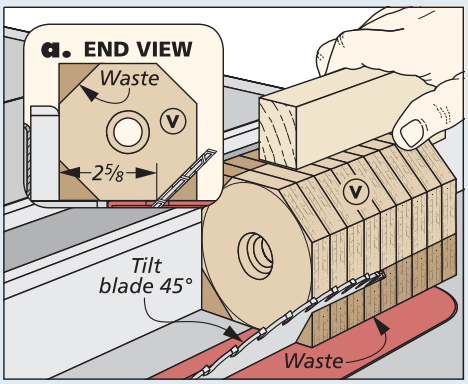

Removing Waste. Remove the bulk of the waste at the table saw by knocking off the corners of the glued-up blank.

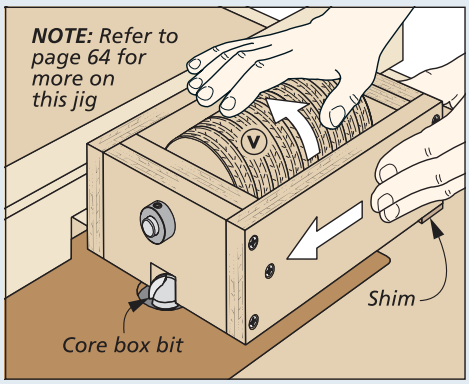

Final Rounding. Use the jig at the router table to "turn" the roller round, then taper each end to create a crown.

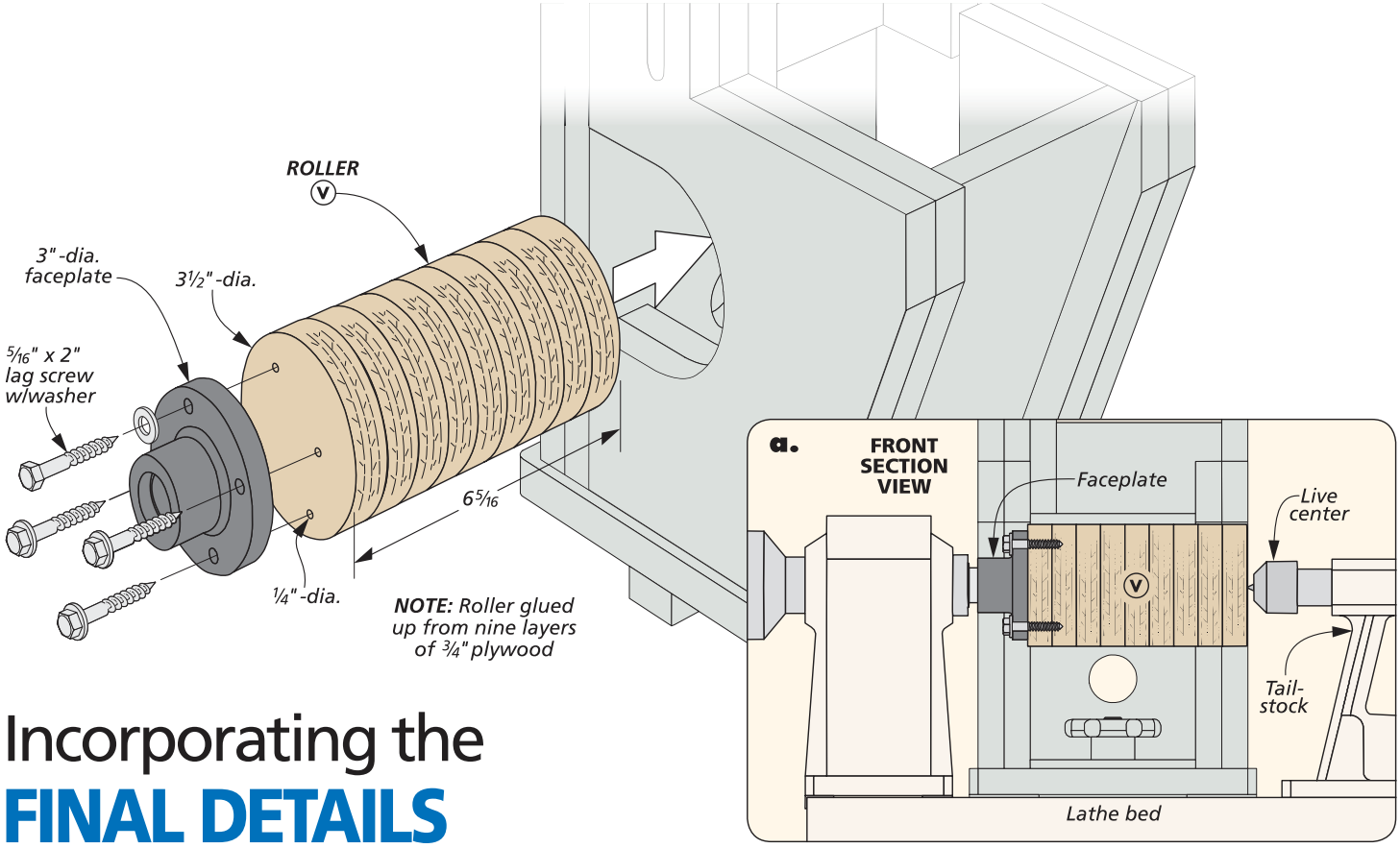

Incorporating the FINAL DETAILS

There are a few more things to add to the sander. And the key one here is the lower drive roller. It transfers power from the lathe to the sanding belt. To finish things up, you'll add the platen and table.

THE OTHER ROLLER. The construction of the lower roller starts out much the same as the idler roller. The only difference is you don't need to drill holes through the blanks. Simply apply glue, align all the edges, and then add the clamps.

After the glue dries, remove the clamps and draw diagonal lines on each end of the blank. This helps locate the screw holes for mounting a faceplate and live center. The faceplate is permanent since it's used to power the sander. But first, you use it to turn the roller round on the lathe. Just remember to knock the corners off of the blank before mounting the faceplate, as in the first drawing below.

When turning the roller round on the lathe, use care to keep it a consistent diameter all the way across. Any variation may cause problems with belt tracking. While it's still mounted on the lathe, sand the roller smooth.

A FLAT SURFACE. The belt sander has a platen to make it easy to sand the end or edge of a workpiece flat and smooth. It's made out of plywood faced with plastic laminate (drawing on opposite page). I made the platen, painted the edges, then applied the laminate before attaching it to the rails on the sander.

HARDWOOD TABLE. The last piece to add to the sander is the table. It couldn't be simpler: Cut it to size, round the corners, and fasten it to the sander with screws.

USING THE SANDER

Now that the sander is complete, you're ready to put it to the test. I want to walk you through the steps of installing it on your lathe and using it.

LATHE ATTACHMENT. The first thing you'll need to do is install the lower roller onto the lathe by threading the faceplate onto the spindle. Then remove the tailstock so you can attach the sander.

The next step is to loosen or remove the clamp block, bolt, and knob from the sander and slide the sander into position on the lathe bed. The lower roller should pass through the notches in the sides.

You'll secure the sander to the lathe bed using the clamp block, bolt, and knob. To make sure the belt tracking is consistent, align the idler roller over the lower roller before tightening the knob.

All that's left is to slip the sanding belt over the two rollers, keeping it centered on each roller. Then just push the lever up and secure it with the catch. This will maintain tension on the belt as you make final adjustments. Finally, slide the tailstock in place and you're ready to go.

How-To: TURNING THE LOWER ROLLER

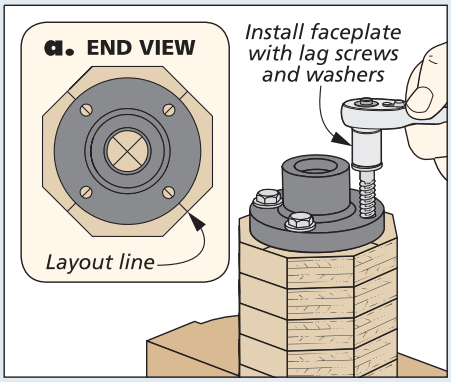

Installing the Faceplate. Use the diagonal centerlines as a guide for locating and drilling the screw holes.

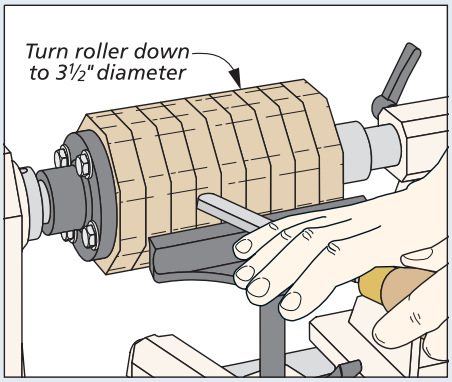

Turning Round. Mount the blank on the lathe and turn the roller round. You don't need a camber on this one.

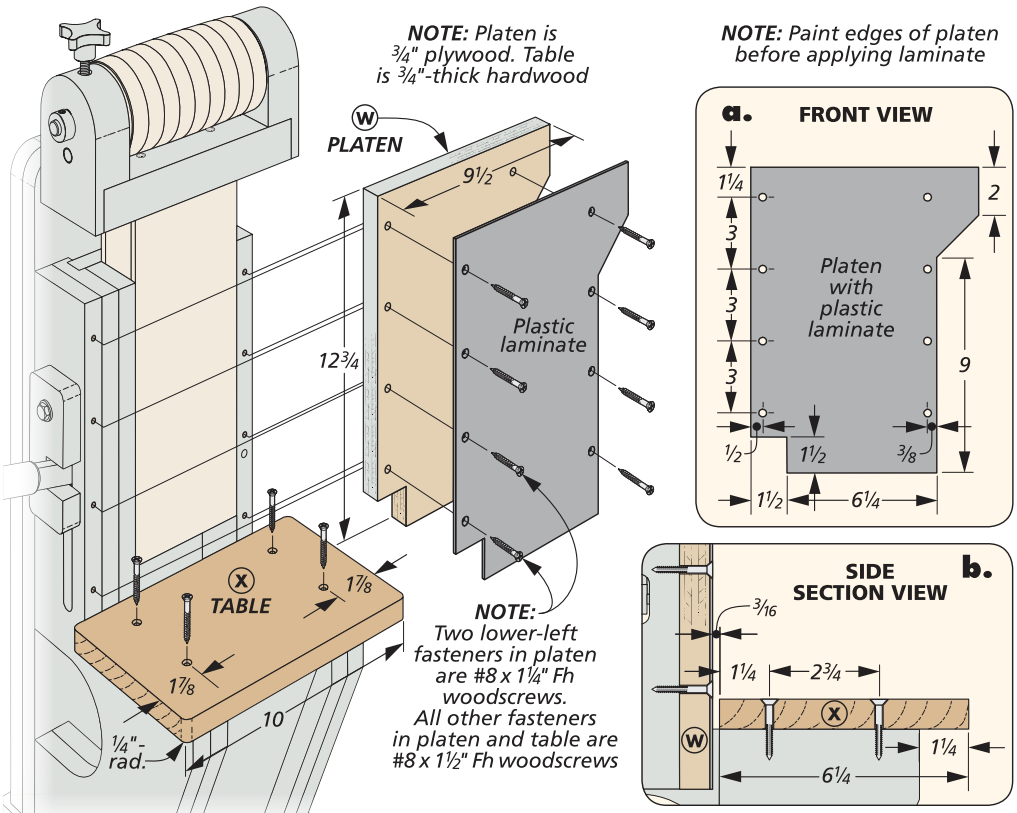

▲ To make it possible to change the belt, lower the lever to release tension on the springs.

LATHE SPEED. Before you power up the lathe, spin the belt by hand to check its tracking. Adjust the tracking knob as necessary to keep the belt centered.

Next, set the lathe to its lowest speed and make any final tracking adjustments. You may need to experiment with the speed as you test out the sander. You'll soon discover that a sanding belt doesn't need to move very fast to be effective.

SANDING BELTS. The sander uses commonly available 6" x 48" sanding belts. You can find them ranging from 36- to 220-grit. I find that I use 80- or 100-grit most of the time for the bulk of the shaping I do at the sander. But I keep at least one of each grit on standby.

The belts are easy to change. Slide the tailstock out of the way first. Then lift up on the tension lever, rotate the catch out of the way, and slowly release the lever (photo above). You may have to press down on the upper roller just a bit to completely release the tension to that the belt slips off the rollers easily. Reverse the process to install a different belt.

Getting double-duty out of a tool is always a win for a small shop. I think you'll get a lot of use out of this handy attachment for your lathe. W

Materials, Supplies & Cutting Diagram

A	Base (1)	¾ ply. - 8¼ x 8¼
B	Clamp Block (1)	1¼ x 2 - 4¼
C	Keys (2)	⅝ x 1¼ - 2
D	Left Side (1)	1½ ply. - 9 x 20
E	Right Side (1)	1½ ply. - 9 x 8¾
F	Back (1)	1½ ply. - 7¾ x 24
G	Rails (2)	¾ ply. - 2 x 12¾
H	Slide Support (1)	¾ ply. - 6½ x 12¾
I	Catch (1)	¾ ply. - 2 x 5
J	Door Stop (1)	¼ hdbd. - ¾ x 4¾
K	Door (1)	¾ ply. - 4¾ x 9 13/16
L	Cam Front/Back (2)	½ x 4¾ - 4
M	Cam (1)	½ x 4¾ - 1 13/16
N	Cam Filler (1)	½ x 4¾ - ½
O	Box Top (1)	1½ x 4¾ - 4¼
P	Box Bottom (1)	1½ x 4¾ - ¾
Q	Box Front/Back (2)	¼ ply. - 4¾ x 12¾
R	Lever (1)	⅜ steel x ¾ - 12
S	Handle (1)	1-dia. x 3
T	Yokes (2)	1½ ply. x 3¼ - 5
U	Yoke Base (1)	1½ ply. x 3¼ - 8¾
V	Rollers (2)	6 5/16 ply. x 3½-dia.
W	Platen (1)	¾ ply. - 9½ x 12¾
X	Table (1)	¾ x 6¼ - 10

- (2) 1.218" OD x 4" Comp. Springs
- (2) ½" Shaft Collars
- (2) ½" ID x 1⅛"OD Ball Bearings
- (2) ½" SAE Washers
- (1) ½"-dia. x 24" Steel Rod
- (1) 5/16"-18 x 3" Studded Knob
- (1) ⅜" x ¾" - 12" Steel Bar
- (1) ¼"-dia. x 2" Steel Rod
- (1) ¼"-dia. x 1½" Steel Rod
- (1) ½"-13 x 3" Carriage Bolt
- (1) ½" USS Washer
- (1) ½"-13 Cast Iron Knob
- (2) Magnetic Catches
- (1) ¼"-20 x ⅞"-dia. Knob w/screw
- (1) ¼"-20 x 1" Ph machine screw
- (5) 5/16" x 2" Lag Screws
- (1) 3"-dia. Faceplate
- (5) 5/16" USS Washers
- (2) #8 x 1¼" Fh Woodscrews
- (10) #8 x 1½" Fh Woodscrews
- (9) #8 x 2" Fh Woodscrews
- (15) #8 x 2½" Fh Woodscrews
- (1) 1"-dia. x 3" Dowel
- (1) 18" x 18" Plastic Laminate
- (1) 6" x 48" Sanding Belt

ALSO NEEDED:
One 60" x 60" Sheet of ¾" Baltic Birch Plywood
One 12" x 24" Sheet of ¼" Plywood
One 6" x 6" Piece of ¼" Hardboard

NOTE:
1.6 bd. ft. of maple in varying thicknesses also required. Reference parts B, C, L-P, and X above.

Heirloom Project

Louvered-Door TV Console

With bold looks and a wide top for almost any size television, this console is designed with the demands of a modern entertainment center in mind.

Of all the devices in our homes, few have changed as much in recent years as the TV. With the advent of flat screens, you no longer need a deep cabinet to house the hub of your family's entertainment.

With that in mind, I designed this TV console to accommodate today's flat screens. And that starts by making the unit versatile enough to accept almost any size of television that you want to put on it. Here, the answer was simple: Just leave the top open.

BEYOND THE BASICS. Below the top, you'll find open shelves in the middle flanked by enclosed cabinets on the ends. This gives you a variety of storage options for DVDs or the components you'll need for your entertainment center setup. The louvered doors allow plenty of airflow, so they're fine for housing cable boxes and speakers out of sight. And all the shelves and back panels are notched to give you plenty of options for running wires to your components.

UNIQUE LOOK. The console is certainly a functional piece of furniture, but it's also not lacking in style. A number of built-up moldings, plus the louvered doors, make it a challenging but fun piece of furniture to build. Of course, it's hard to miss the striking finish, which was created with a combination of water-based stain and glaze. You can follow our directions for duplicating the look (refer to page 67) or select a finish of your own if you desire.

Construction Overview / OVERALL DIMENSIONS: 80"W x 28"H x 18¾"D

Large top accommodates nearly any size of television

Cove and bead moldings add a decorative touch

Beveled backing strips support cove molding

Plywood back panels feature cutouts for routing wires and added ventilation

Doors feature mortise and tenon joints and louvered center panels

Adjustable shelves rest on shelf supports

Plywood cases joined with rabbets and screws

Base comprised of a plywood panel, hardwood frame, and mitered facings

Frames with moldings dress up the ends of the console

NOTE: Refer to page 67 for hardware and finishing information

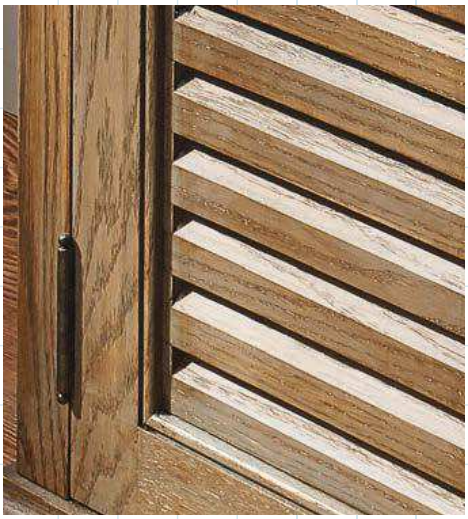

▲ Louvered doors lend a stylish look to the console and also allow plenty of airflow to any components you want to store inside.

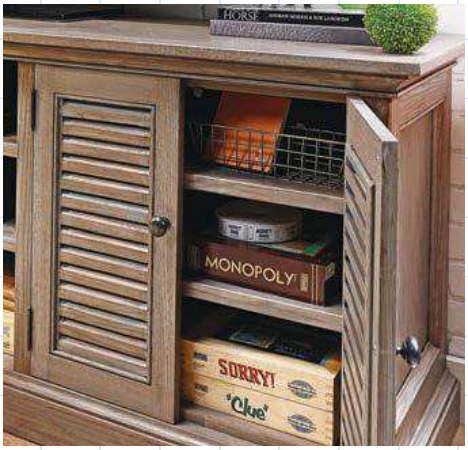

▲ Adjustable shelves mounted behind the doors offer ample storage options for electronics or any other family room essentials.

▲ Built-up moldings below the top and on the end frames help to give this functional storage project a fine-furniture look.

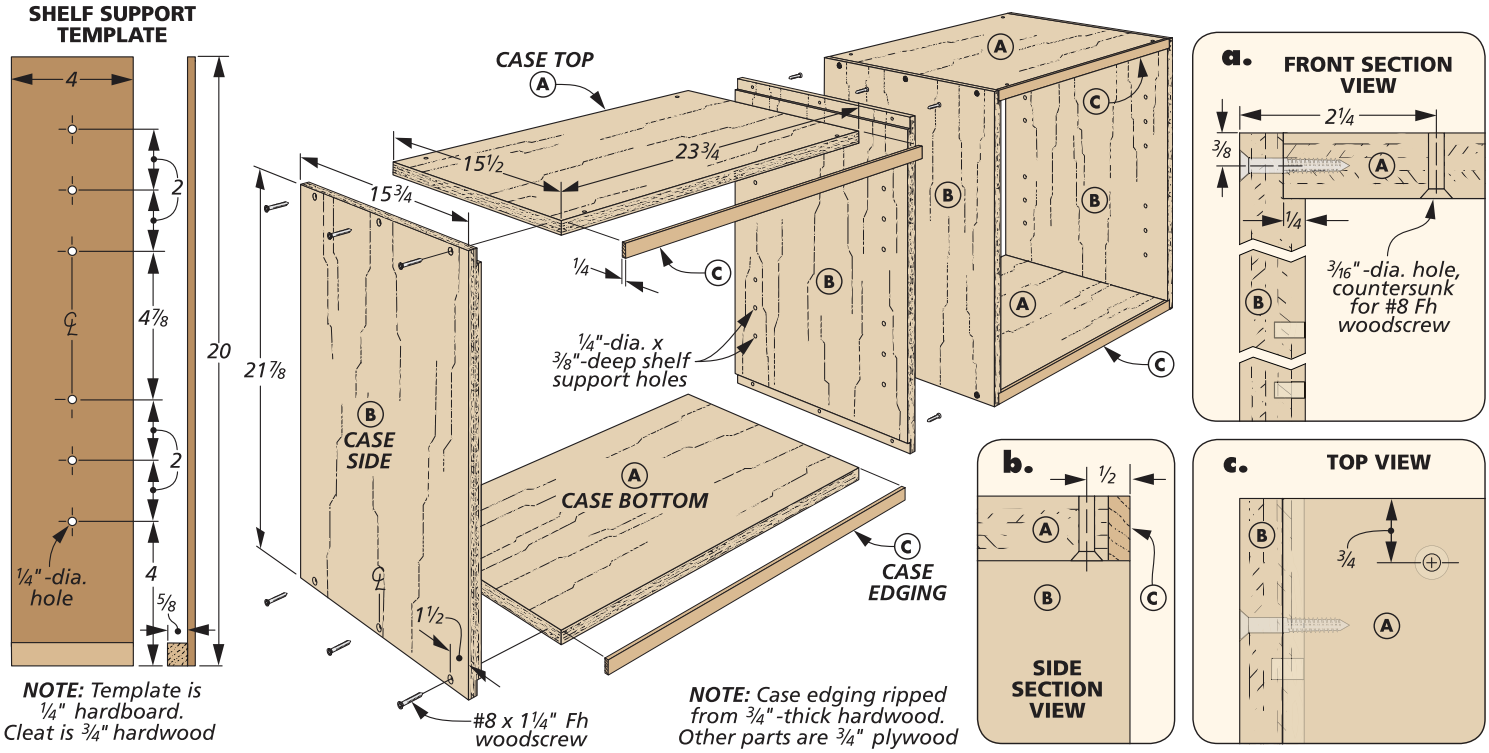

Constructing the CASES & BASE

The heart of this console is a pair of plywood cases. Later on, these cases accept adjustable shelves and louvered doors to offer enclosed storage. They're attached to either end of a base assembly (refer to the next page), which creates an area of open storage space between the two cases.

As you can see in the drawings above, the cases are just basic plywood boxes joined at the corners with rabbets and screws. So you can start by cutting the tops, bottoms, and sides of the two identical cases to size from ¾" plywood. Note that the tops and bottoms are ¼" narrower than the sides to accept edging strips. The sides are covered by stiles later on in the construction process.

RABBETS. I cut rabbets in the sides to register the top and bottom panels and keep everything square during assembly. The setup for cutting the rabbets is shown in the lower left drawing.

HOLES. The sides also receive a series of holes near both edges that accept shelf supports later on. I like to use a hardboard template and a hand drill in situations like this to ensure the most consistent results from panel to panel. The details for the template are shown above left and in the middle drawing below. Note that the template registers off the bottom edge of the panel rather than the shoulder of the rabbet. That's because you'll use it again later to drill matching panels that aren't rabbeted.

EDGING. Now add the edging to the the top and bottom panels. I glued and clamped these on then trimmed them flush (lower right drawings). Note the support block used to stabilize the router.

ASSEMBLY. You're ready to put the two cases together. Dry assemble them to drill the countersunk holes for screws, then glue and screw them together.

How-To: PREPARE THE CASE PANELS

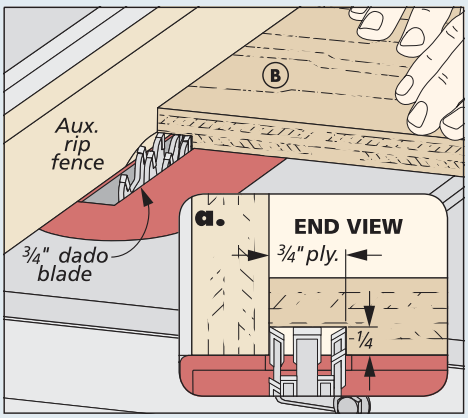

Rabbets. The side panels receive rabbets at both ends. Use a dado blade buried in an auxiliary rip fence to make these cuts.

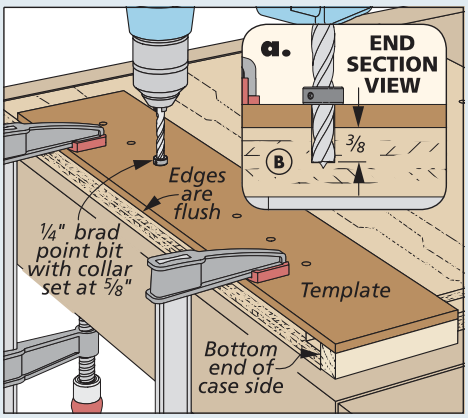

Shelf Support Holes. A hardboard template and a hand drill make quick work of drilling shelf support holes.

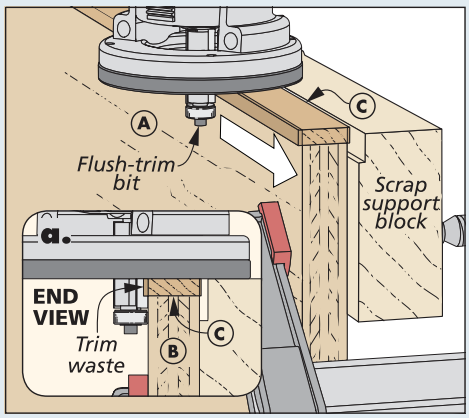

Flush-Trim Edging. For smooth panels, apply extra-wide edging and trim it flush with the panel using a router.

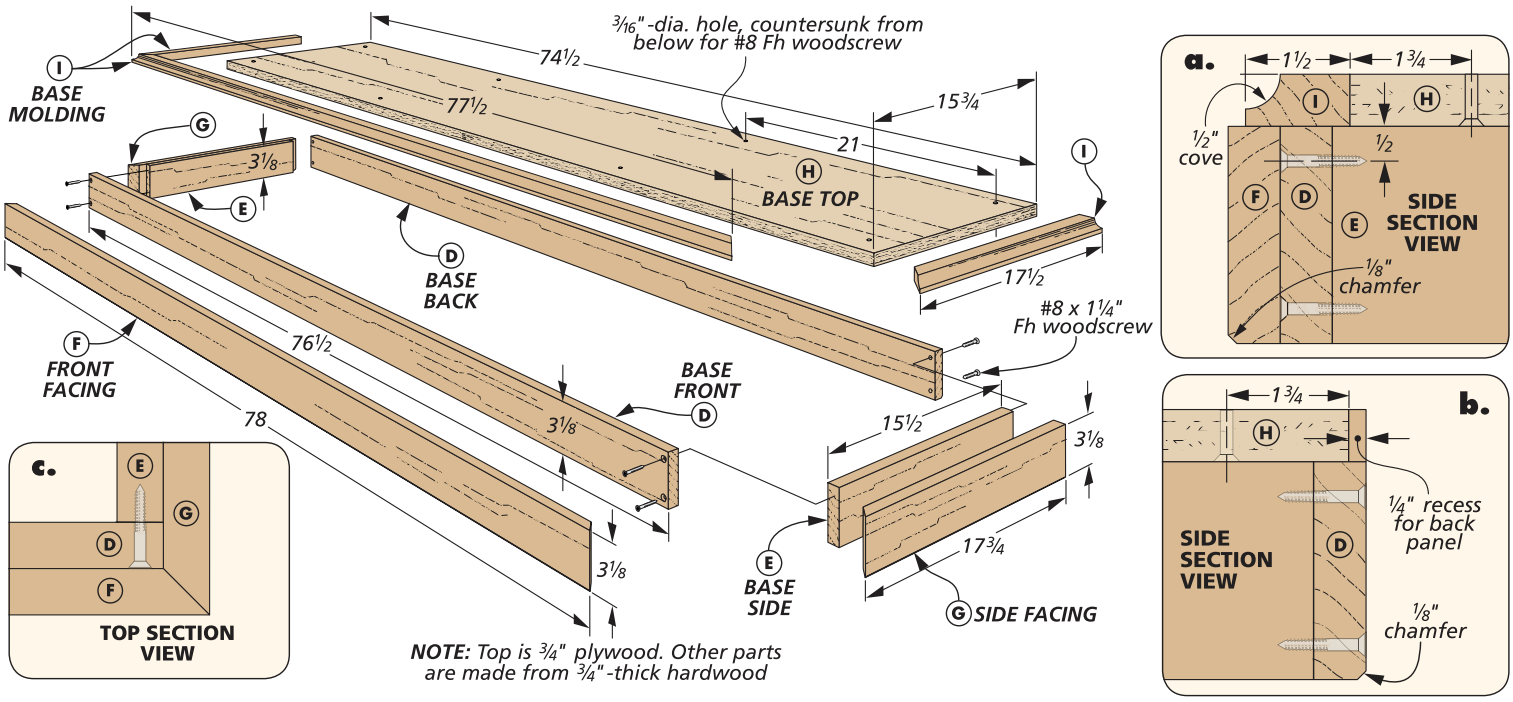

BASE ASSEMBLY

The base assembly serves as a sturdy platform for the cases. It starts as a hardwood frame that's wrapped with a facing and topped with plywood and moldings.

BASE FRAME. The first order of business is making the base frame. As you can see in the drawings above, it consists of a front, back, and sides. After cutting these parts to size, glue and screw the frame together. Since there's no joinery to register the pieces, you'll want to get out your square and tape measure to keep everything square during assembly.

FACINGS. Next up are the facings that wrap around the front and sides of the frame. As before, cut the facings to size, then carefully miter the corners to match up, as shown in Figure 1 at right. After that, you can glue and clamp the facings to the base frame. To prevent the bottom edges of the base from chipping or splintering, I routed a slight chamfer on them after assembly (Figure 2).

TOP PANEL. The top panel completes the base assembly. It's a large plywood panel with mitered molding on the front and sides. You'll start by cutting the panel to the dimensions provided in the drawing above.

The base molding features a ½" cove along the edge. To ensure a clean profile at the corners, I waited until after applying the molding to the panel to rout this cove. For now, cut the strips to size and miter the corners (Figure 3). Note that the side moldings extend ¼" beyond the back edge of the panel (detail 'b'). This forms a recess for adding the back later.

I used long pipe clamps while gluing the molding to the panel. If your clamps aren't long enough, you'll find tips for applying these strips on page 61. Then rout the profile as shown in Figure 4.

Before attaching the top panel, drill countersunk holes in the underside for installing the cases. After that, it's just a matter of centering the top assembly side to side over the base and facings, and positioning the moldings and facings flush at the back before gluing on the top. You'll want to hold off on connecting the cases to the base for now.

How-To: BUILD THE BASE

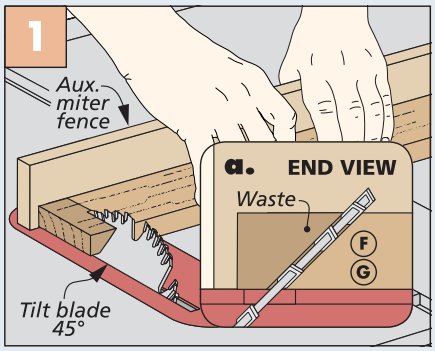

Miter Frame Facings. Tilt the table saw blade 45° to miter the facings to meet at the base's front corners.

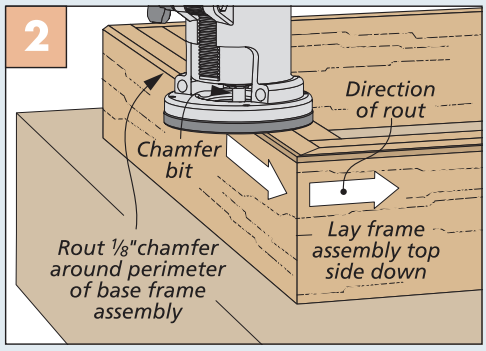

Chamfers. Rout a slight chamfer around the bottom edge of the base frame after assembly to prevent chipping.

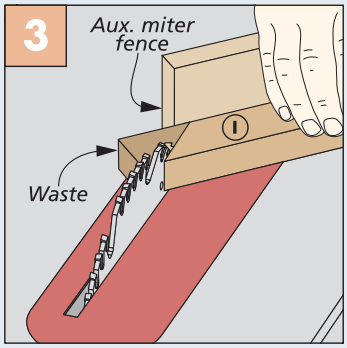

Miter Moldings. To miter the base molding strips, rotate the miter gauge to 45°.

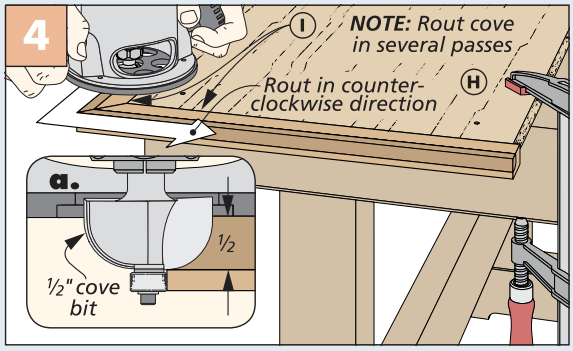

Cut Cove. For the an even profile, cut the cove on the moldings using a hand-held router after they're glued to the top panel.

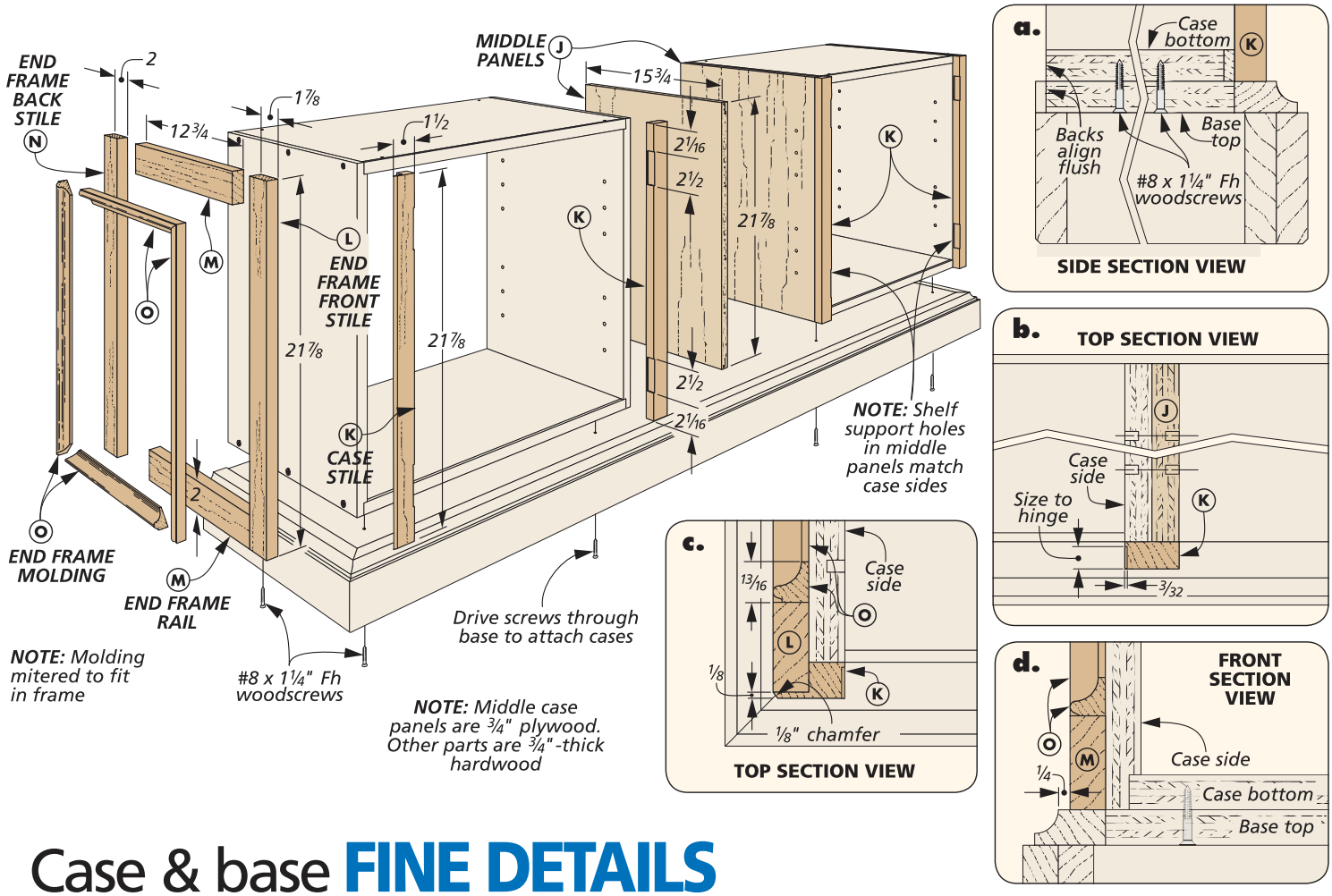

Case & base **FINE DETAILS**

Before you attach the cases to the base assembly, there's a bit more work to complete on the cases. The next order of business is dressing out the cases with several components. These include middle panels, end frames, case stiles, and moldings.

MIDDLE PANELS. The sides of the cases that face inward each get an additional panel added to them, as shown in the drawings above. These panels are the same size as the case sides. They beef up the cases and have holes for mounting the center shelves when the cabinet is complete.

You can get started by cutting these panels to size. Then, get out the hardboard template you used to drill the shelf support holes in the sides earlier (refer to page 42), and drill a matching set in these panels, as well. Finally, align the panels with the inward facing case sides, and then glue and clamp them in place.

CASE STILES. The front edges of the cases are covered with four hardwood case stiles. These pieces are wide enough to cover the edges of both panels in the middle. On the outside edges of the cases, they're rabbeted to wrap around a frame that covers the ends of the cases. The stiles also provide a place to mount the doors.

After you cut these stiles to size, the first thing you want to do is rout mortises for the door hinges. I made a simple router jig to help with this (box at left). Before you build your jig, you'll want to have your hinges on hand first, and use them to size the opening in the jig. Once it's built, though, you can rout the mortises as shown in Figure 1.

At this point, the middle two stiles that cover the inner case sides and middle panels can be glued and clamped on. Line them up so they're flush with the edges of the middle panels.

How-To: ROUT HINGE MORTISES

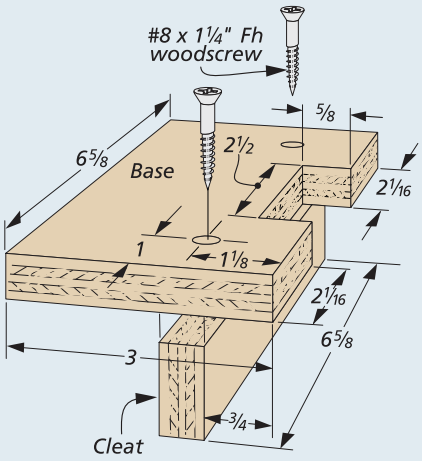

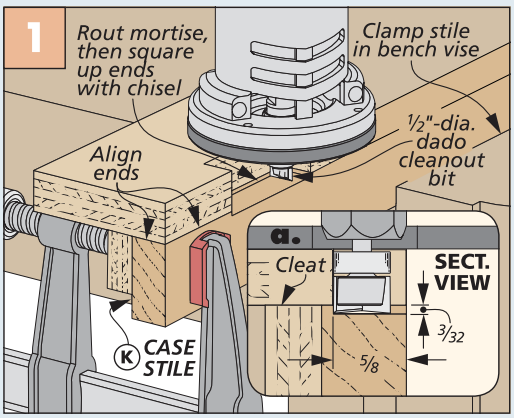

Mortising Jig. Follow the cutout on this jig with a dado cleanout bit to rout the hinge mortises in the case stiles.

OUTER CASE CORNERS. The outer case stiles require a little bit more work. As shown in detail 'c' on the previous page, they're rabbeted to wrap around the front stile of an end frame that you'll add next. After rabbeting these stiles (Figure 1 at right), glue them to the end frame stiles. The last detail is to rout a slight chamfer on the corner of this assembly to soften it and conceal the joint line between the two parts (Figure 2).

END FRAMES. With the chamfers routed, these corner assemblies are ready to be glued and clamped in place on the front, outside-facing corners of the cases. Then you're ready to cut end frame rails and back stiles to size, as shown in the main drawing on the opposite page. Note that the end frame back stile overhangs the back of the cases by ¼". This creates a pocket for the back panel to fit into. Then glue and clamp these parts on.

END FRAME MOLDING. To really add appeal to the ends of the TV console, I applied a decorative molding around the inside perimeter of the end face frames. The molding requires a few cuts, but it isn't difficult to make. The secret is to start with a wide blank, as shown at right. First, you'll rout a decorative bead near the bottom edge of the blank (Figure 3). Then a core box bit takes care of the rest of the shaping of the molding (refer to Figure 4). I routed this cove using a series of progressively deeper passes.

A simple rip cut at the table saw is all that's left to complete the molding (Figure 5). After carefully measuring the inside of the end frame opening, miter the ends of the pieces to fit, as shown in Figure 6. Your clamps should have enough reach to hold these pieces in place on the case ends as the glue dries.

JOIN THE CASES TO THE BASE. Now that your cases are all dressed up, it's time to join them to the base. This requires driving in a few screws, but there are still some alignment issues to take care of first. I found it easier to set the base on a pair of sawhorses, and then put the cases on top of it. This way, you can see how everything aligns.

Case alignment at the back is a fairly simple matter. You just need to make the back edge of the case bottoms perfectly flush with the back edge of the base top panel. At the ends of the base, there should be a ¼" gap between the edge of the cove on the base molding and the end frames (refer to detail 'd' on the previous page).

Once the cases are aligned properly with the base, it's a good idea to add a few clamps to prevent them from shifting around. Finally, drive the screws through the countersunk holes in the base top panel and into the underside of the case bottoms to complete the connection.

How-To: COMPLETE THE FACE FRAMES

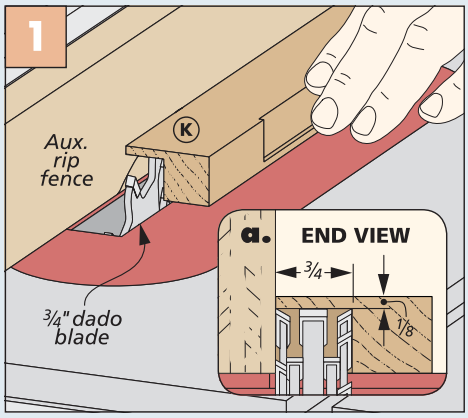

Rabbet. The outer case stiles receive a deep rabbet. Cut this in a series of two progressively deeper passes.

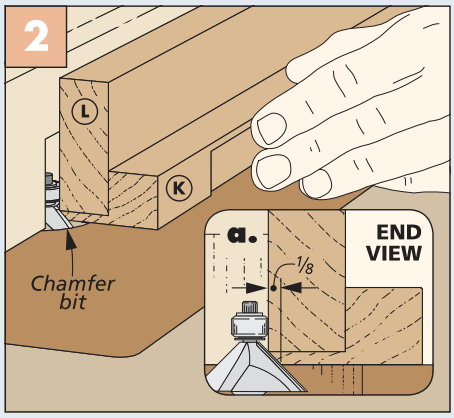

Chamfer. After joining the outer case stiles with the end face frame front stiles, chamfer the corner.

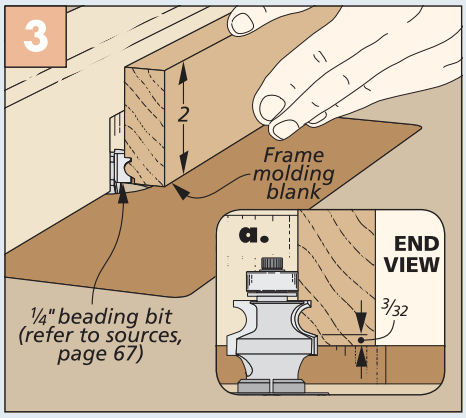

Beading Bit. The elaborate end frame molding starts by beading one edge of a wider blank.

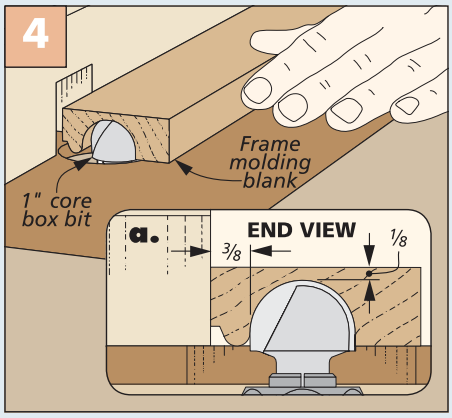

Cove. Turn the blank on its face, and cut a cove with a core box bit. Make a series of progressively deeper passes.

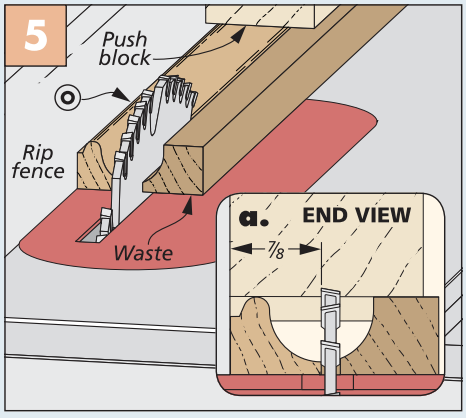

Rip Molding. Set the rip fence and pass the blank through the blade to complete the final shape of the molding.

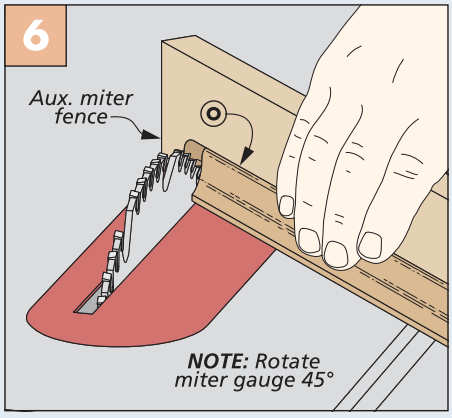

Miter Molding. Carefully measure and miter the ends of the moldings to fit inside the end face frames.

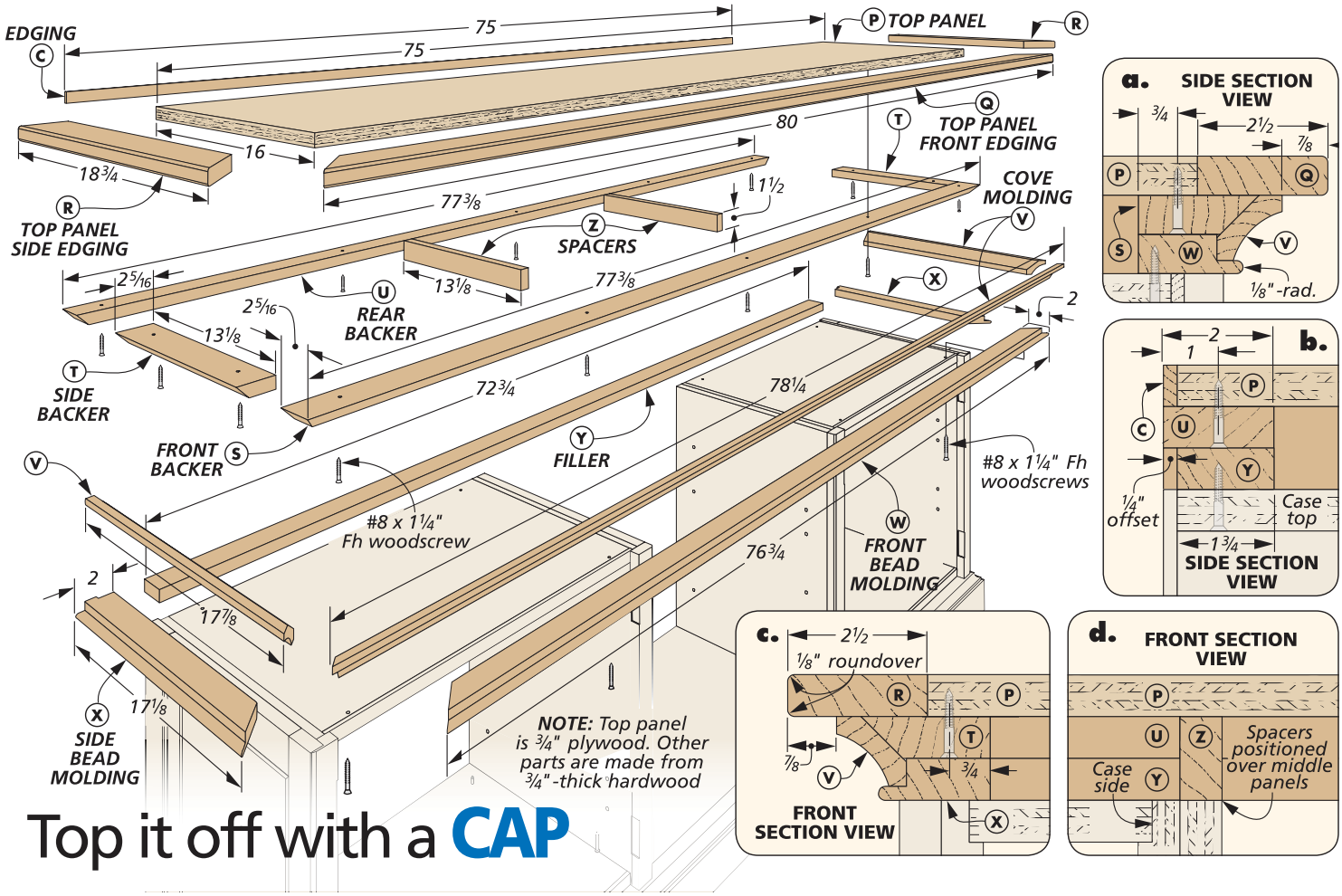

Top it off with a CAP

The TV console's cap is a built-up assembly that's mounted to the top of the cases. It consists of a top panel with hardwood edging dressed up with a series of moldings.

TOP PANEL. To assemble the cap, you'll actually start at the very top and build up the rest beneath it. So I started by cutting the plywood panel to size. A thin edging strip covers up the exposed plywood at the back of the top panel.

The front and sides of the top panel are wrapped in wide edging pieces that are the same thickness as the panel. They're mitered at the corners before gluing and clamping them around the panel. After that, a slight roundover around the top and bottom edges of these pieces finishes the job.

COVE BACKERS. At this stage, you can flip the top panel upside down and begin the process of adding the other parts to the underside. This starts with four backers. As the name implies, these pieces form a backer for pieces of decorative cove molding that go on later. Since the cove molding rests at 45° to the top, the backers are each beveled to fully support the molding.

When preparing these backers, you'll want to label the parts and pay close attention to the cuts. That's because the parts are all different from one another. For example, the front backer has a bevel cut along the front edge and the ends (Figures 1 and 2 below). The side backers just have a bevel along the outside edge (not the ends). And the rear backer has bevels on the ends only.

How-To: ADD BACKING PIECES

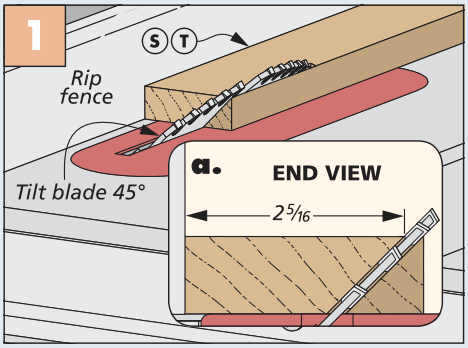

Bevel Rip. The front and side backers both receive a bevel rip cut along the outward-facing edge.

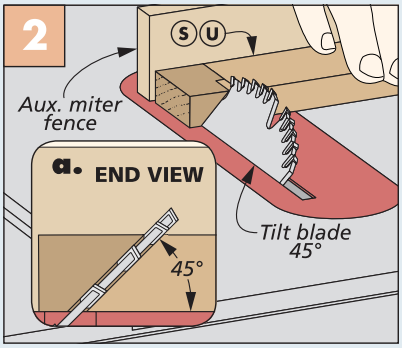

Bevel Ends. Use a miter gauge with an auxiliary fence to bevel the ends of front and rear backers.

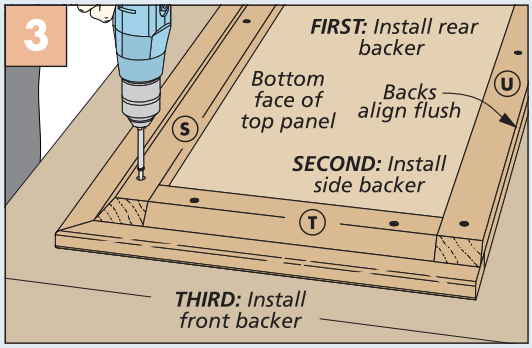

Attach Backers. Align the rear backer flush at the back edge and centered side to side. Attach it and the other backers with screws.

After making these cuts, installing the cove backing is easy. Start by aligning the rear backer flush with the edging strip at the back and centered side to side. Then add the other pieces. Drive in screws to secure them to the top panel (Figure 3, previous page).

COVE MOLDING. The cove molding is next. As you can see in details 'a' and 'c' on the previous page, it rests at a 45° angle to the top panel to add a decorative touch to the cap assembly. To make it, I cut the bevels on the edges of the blank first. This is easy to do with a chamfer bit as shown in Figures 1 and 2 at right.

Next up is the cove. A horizontal crown molding bit took care of this detail. I cut most of the cove in just one pass (Figure 3). Then I made a very light pass to smooth out the cove and reduce the amount of sanding I'd have to do.

All that's left is mitering the molding to fit around the front and sides of the cove backing. It's easy to do this by standing the cove up at its spring angle in a supportive cradle (Figure 4). Now glue and nail the molding to the backers (refer to Figure 5).

BEAD MOLDING. The bead molding is the next component of the cap assembly. It requires a couple of cuts at the router table. The first is a decorative bead that's visible underneath the cove molding, as shown in Figure 6. Then, you'll flip the workpiece over and cut a rabbet along the edge to capture the bottom edge of the cove molding (Figure 7).

As before, you'll miter the bead molding to fit at the front corners. But before you glue it on, there's one more detail to add to the side bead moldings. That's a notch that allows the back panel to fit in place. This notch is easy to cut with a back saw, as shown in Figure 8.

BACK FILLER STRIP. Now you're ready to glue and clamp the bead moldings to the assembly. At the back, I attached a filler strip. Note that this aligns with the notch you just cut in the molding sides (detail 'b,' previous page).

CROSS SPACERS. Before you attach the cap assembly to the cases, add a pair of cross spacers, as shown in the main drawing and detail 'd' on the previous page. These fill voids in the underside of the cap when it's assembled. Now you can position the cap on the cases and drive in screws.

How-To: COMPLETE CAP ASSEMBLY

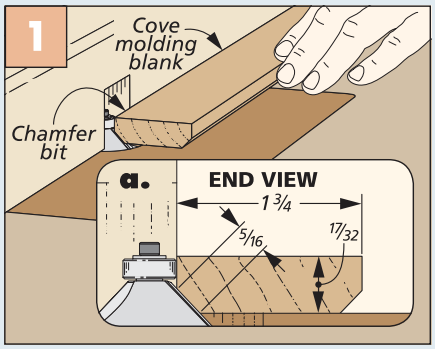

Chamfer Front. Chamfer the front edges of the cove molding using a chamfer bit and this fence setting.

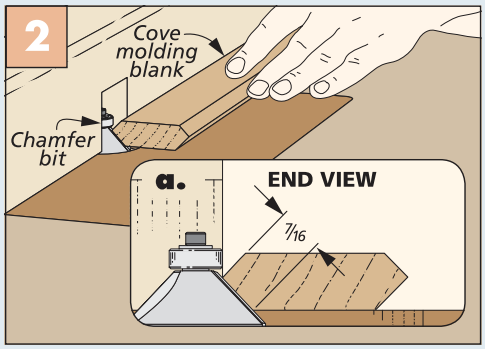

Chamfer Back. Adjust the fence and bit height in order to make a deeper chamfer cut on the molding's back edges.

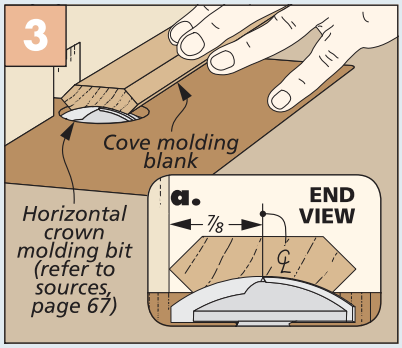

Rout Cove. A horizontal crown molding bit takes care of the cove. Cut it in two passes.

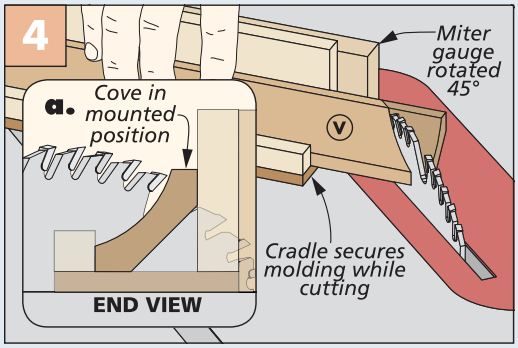

Miters. Stand the molding up at its mounted angle, and pass it through the blade at 45° to cut the miters.

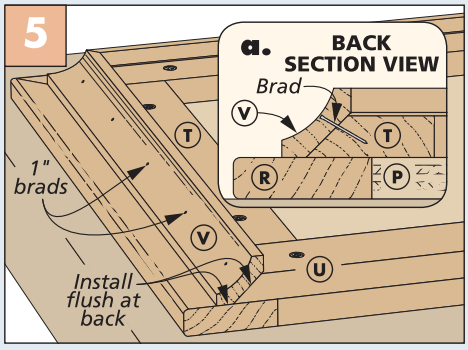

Attach Cove Molding. Position the cove molding against the backer and attach it with glue and small brads.

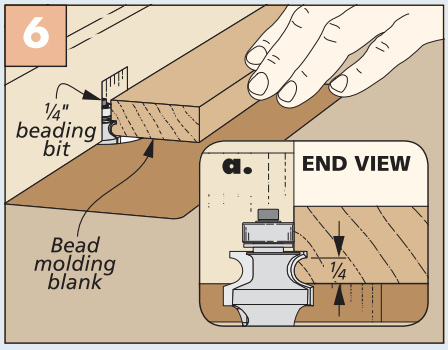

Rout Bead. Set up a beading bit in the router table and cut along the bottom edge of the bead molding.

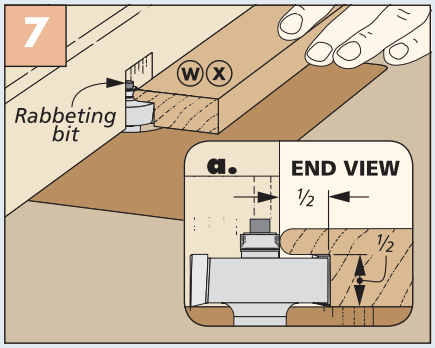

Rout Rabbet. Now cut a rabbet below the bead to fit over the cove molding on the cap assembly.

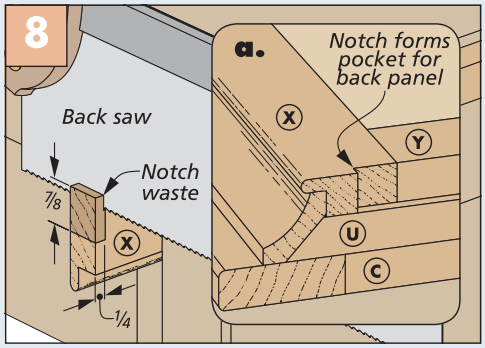

Cut Notches. Use a back saw to cut a small notch at the back of the bead molding to accept the back panel.

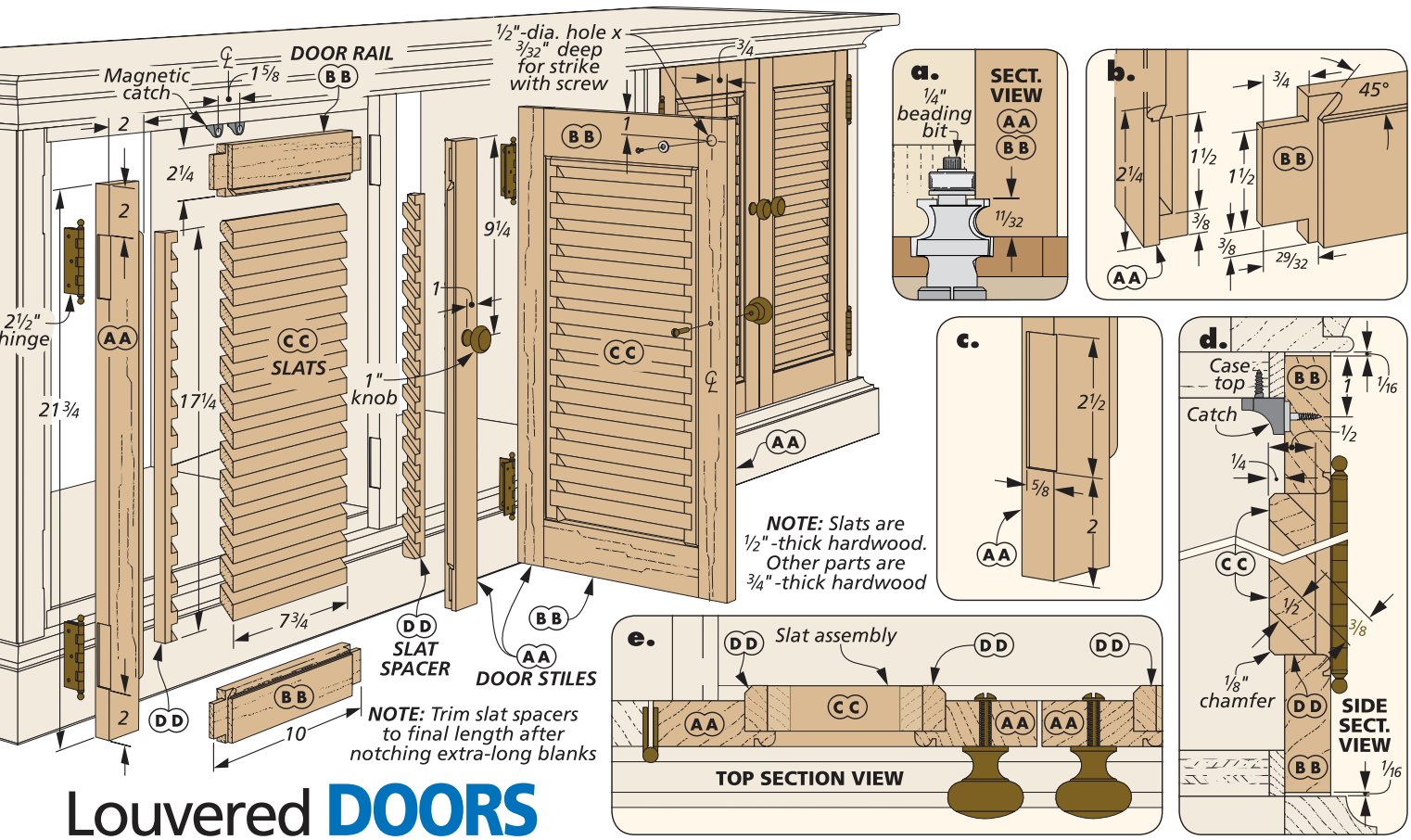

Louvered DOORS

Each case is concealed by a pair of louvered doors constructed with mortise and tenon joinery. The doors are a challenging build, but by taking one a step at a time, you're sure to get great results.

STILES. I started on the door stiles. I made them 1/8" shorter than the case stiles, so they'd fit nicely in the openings. The first detail to cut is a bead on the inside front edge (detail 'a'). Next, I cut a rabbet on the edge behind this bead to accept the slat assembly (Figure 1 below). As you can see in Figure 2, this rabbet has the added advantage of locating your drill bit properly for drilling the mortises.

The bead profiles of the rails and stiles mate up with miters (detail 'b'). To do this, you need to trim away the excess bead at the ends of the stiles (Figure 3). Then use a sharp chisel and a guide to cut the miters as detailed in Figure 4.

RAILS. Now you can turn to the rails. Cut the pieces to size, then rout the bead (detail 'a'). Next up are the tenons that fit the mortises in the stiles. Since the stile is rabbeted, these tenons feature offset cheeks. This allows the rail to mate up flush with the stile on both faces.

It sounds tricky, but in practice cutting the tenons is not difficult. I set my rip fence and dado blade height to cut the longer tenon cheek first (Figure 1, next page). Next, adjust the rip fence, flip the rails over, and cut the shorter cheek (Figure 2). The blade height is the same. All that's left are the end shoulder cuts (Figure 3).

How-To: MAKE THE STILES

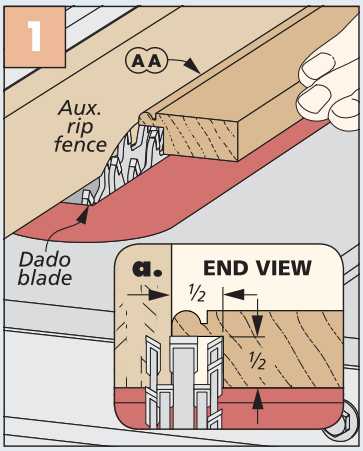

Rabbet. A rabbet in the inside edge of the door stiles accepts the slat assembly later on.

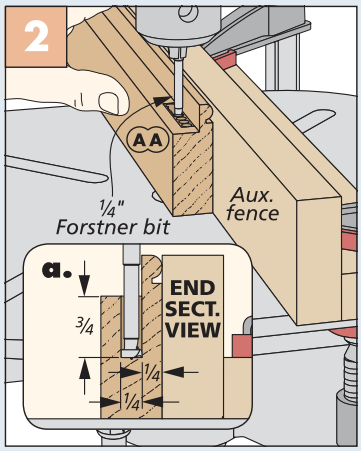

Mortises. Remove the mortise waste at the drill press, then clean them up with a chisel.

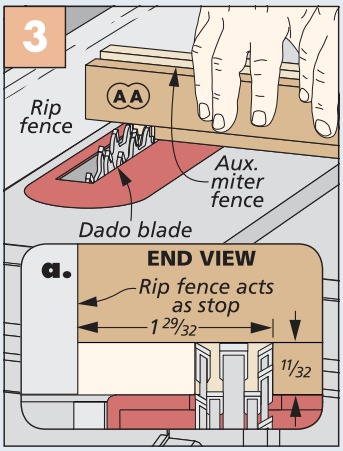

Trim Bead. You'll remove the bead at the end of the stiles using a dado blade.

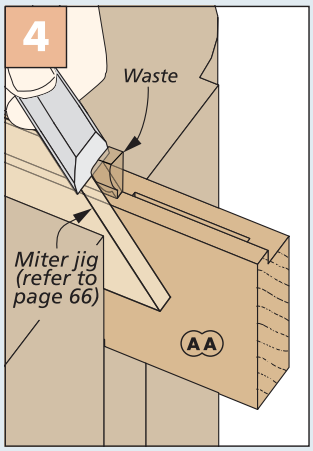

Trim Miter. A sharp chisel and jig make quick work of the miter cut.

MITER & ASSEMBLE. Now you need to trim the bead on the rail to mate with the one on the stile. This cut is a little different than the first one, as you can see in Figure 4. All that's left on the door frames is routing hinge mortises (detail 'c', previous page). You'll use the same router jig as before. Then assemble the frames.

SLAT ASSEMBLIES. The next step is creating the louvered slat assemblies to fit the door frames. These feature beveled slats that rest in angled notches in slat spacers. Once they're assembled, you'll glue them into the rabbets in the door stiles.

SLATS. I started by planing stock for the slats and cutting them all to length. Then it was time to rip a bevel on both edges. To do this, I came up with the jig you see in Figures 5 and 6. For more on the jig, refer to Shop Notes on page 65.

SLAT SPACERS. To form each slat assembly, you'll need to cut a series of evenly spaced, angled notches in a pair of slat spacers to hold the slats. The most accurate way to do this is to make a pair of jigs for the table saw. The jigs are like box joint jigs that are rotated at a 45° angle. A ½" key made from extra slat material is positioned ⅜" from the edge of the blade.

Separate jigs are required to cut the left-hand and right-hand spacers. The nice thing is the jigs are mirror images of one another. The jig for the left-hand spacers rides in the left miter slot (Figure 7), and the right-hand jig rides in the right one (Figure 8). Page 66 has more on the jigs.

Before using the jigs, prepare the slat spacer blanks by cutting them to thickness and width and leaving them extra-long. Then butt the slat spacer against the key to make the first notch, slip the notch over the key, and repeat until all the notches are cut. After you're done, you'll trim the bottom ends flush with one of the notches (refer to detail 'd,' previous page). Cut the top end of each spacer to the final length shown in the main drawing on the previous page.

Now glue the slats into the spacers. When the assemblies dry, rout a slight chamfer around the edges (detail 'd,' previous page). Finally, glue the assemblies into the door frames.

DOOR INSTALLATION. The door construction is officially on the home stretch. Refer to the drawings on the top of the previous page for the details for mounting the knobs, magnetic catches, and hinges.

How-To: COMPLETE THE DOOR PARTS

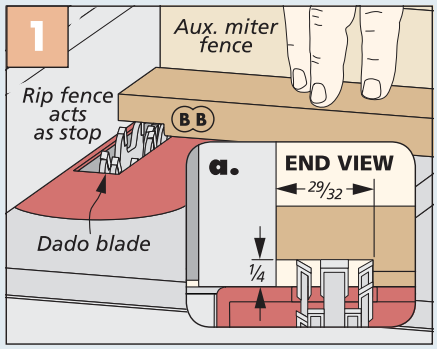

Long Tenon Cheek. Set the rip fence and dado blade height to cut the longer of the two tenon cheeks.

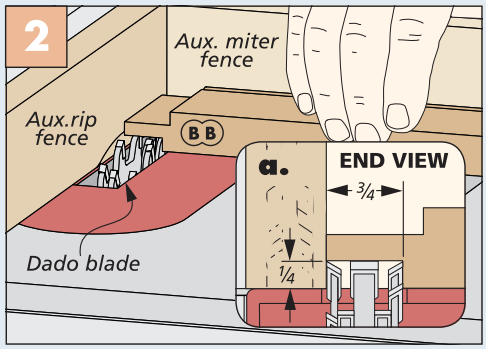

Short Tenon Cheek. Now reposition the rip fence, and cut the shorter of the two tenon cheeks next.

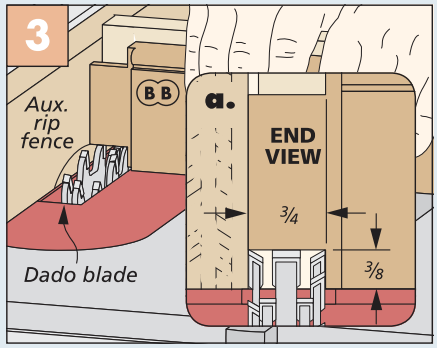

Tenon Shoulders. After adjusting the height of the dado blade, you can cut all the tenon shoulders.

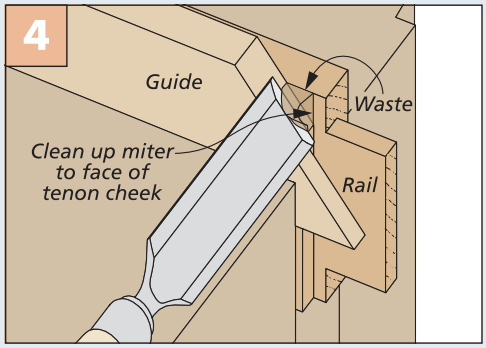

Trim Miter. Use the same chisel guide to trim the miter on the bead on the rail to mate up with the miter on the stile.

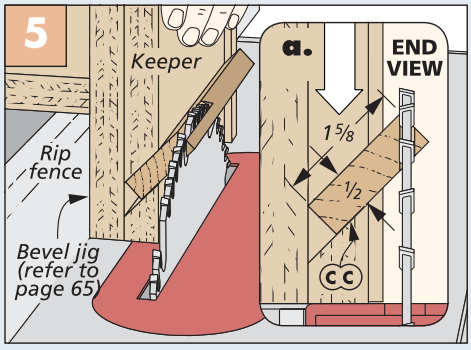

First Bevel. Position the slat blank in the trimming jig, hold it firmly with the keeper, and make the cut.

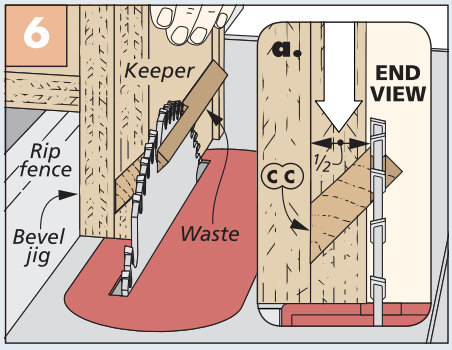

Second Bevel. Now reset the rip fence, rotate the slat, and repeat the process to cut the second bevel.

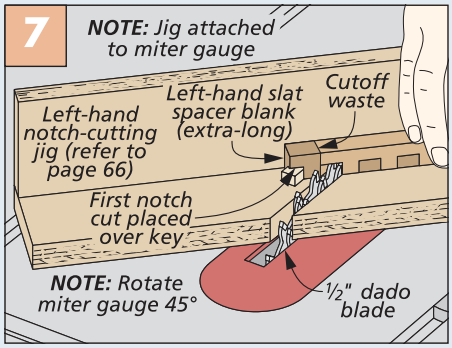

Left-Hand Slat Spacers. Cut a series of notches in the slat spacer blanks using a dado blade and this jig.

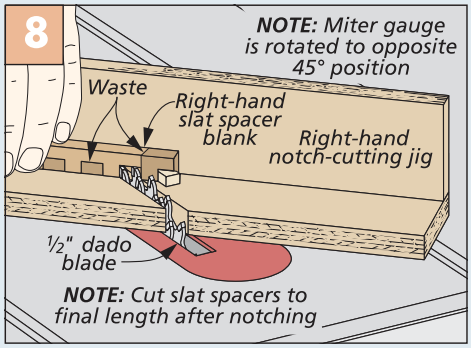

Right-Hand Slat Spacers. The right-hand slat spacer is made using a jig that's a mirror-image of the first one.

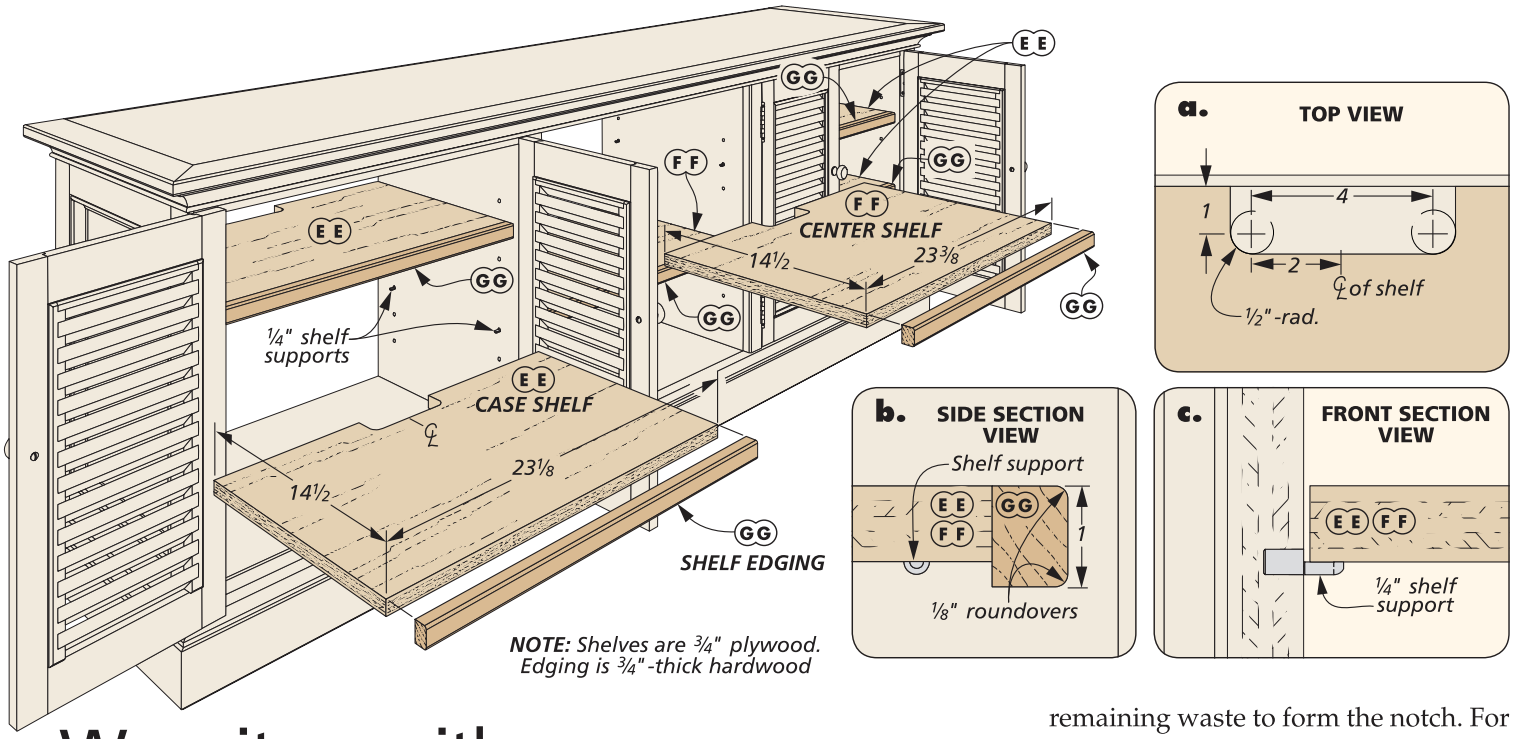

Wrap it up with SHELVES & BACK PANELS

Your stylish new TV console is almost complete. All that's left is adding the shelves, back panels, and of course the finish. I started with the shelves.

SHELVES

The TV console has six shelves. Four of the shelves rest inside the cases. Two span the open, center section between the cases. The shelves are the same width, but the center shelves are just a bit longer than the case shelves (refer to the main drawing above). All of the shelves have hardwood edging strips at the front and notches on the back edge for routing wires. Once they're complete, they rest on shelf supports installed in holes in the case sides and middle panels.

Get started by cutting all six shelves to size from ¾" plywood. Next, you can turn your attention to making the notches on the back edges.

NOTCHES. There's nothing too tricky going on here. The first thing I did was remove the waste in the corners of the notches with a Forstner bit to establish a clean radius (Figure 1). After that, it was just a matter of cutting out the remaining waste to form the notch. For these simple cuts, I turned to my jig saw (Figure 2 below).

EDGING. All that's left to complete the shelves is to add the hardwood edging to the front. This edging is thicker and wider than the edging used previously on the console. The strips align flush at the tops of the shelves but overhang the bottoms (detail 'b'). This gives them a beefier look and also helps to stiffen the shelves. After cutting the shelf edging to size, rout a slight roundover on the front edges. Then glue and clamp the edging strips to the shelves.

BACK PANELS

I wanted the grain to run vertically on the console's back panels. So I made three separate plywood panels rather than one.

How-To: DRILL & CUT OUT ACCESS OPENINGS

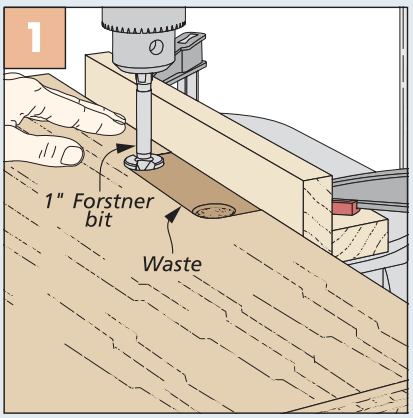

Drill Notch Corners. A Forstner bit establishes a clean radius at the corner of the shelf notches.

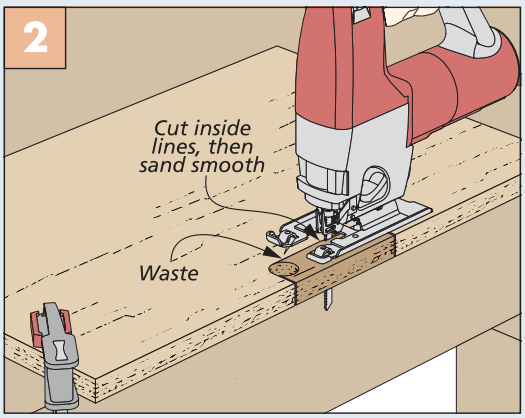

Cut Out Waste. All that's left is cutting out the waste with a jig saw and then sanding the edges of the notch smooth.

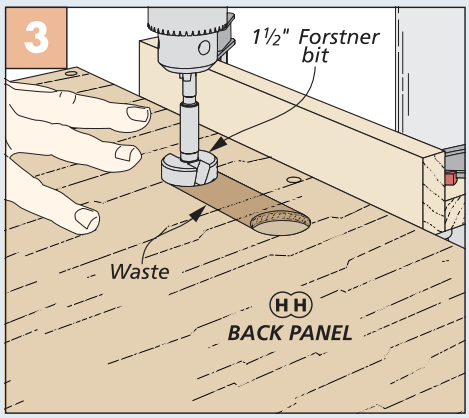

Back Cutouts. The back panel cutouts are similar. Drill the holes, and then cut out the waste with a jig saw to connect them.

Like the shelves, the backs have cutouts for routing wires. Here again, establish the ends with a Forstner bit (Figure 3, previous page). Then connect the holes with a jig saw. As you can see at right, the panels are attached to the case sides, top, bottom, and middle panels with screws.

FINISH. Before attaching the back, though, it's a good time to apply finish. To create the unique look, I used a combination of stain and glaze, followed by lacquer. You can find all the details in Sources on page 67. Of course, if you'd prefer a more traditional finish, that would look great on the console, as well.

ENTERTAINING OPTIONS. After finishing all of the components, your versatile, stylish new TV console is family room-ready. You might just consider buying a big new flat screen to display on your latest woodworking project. W

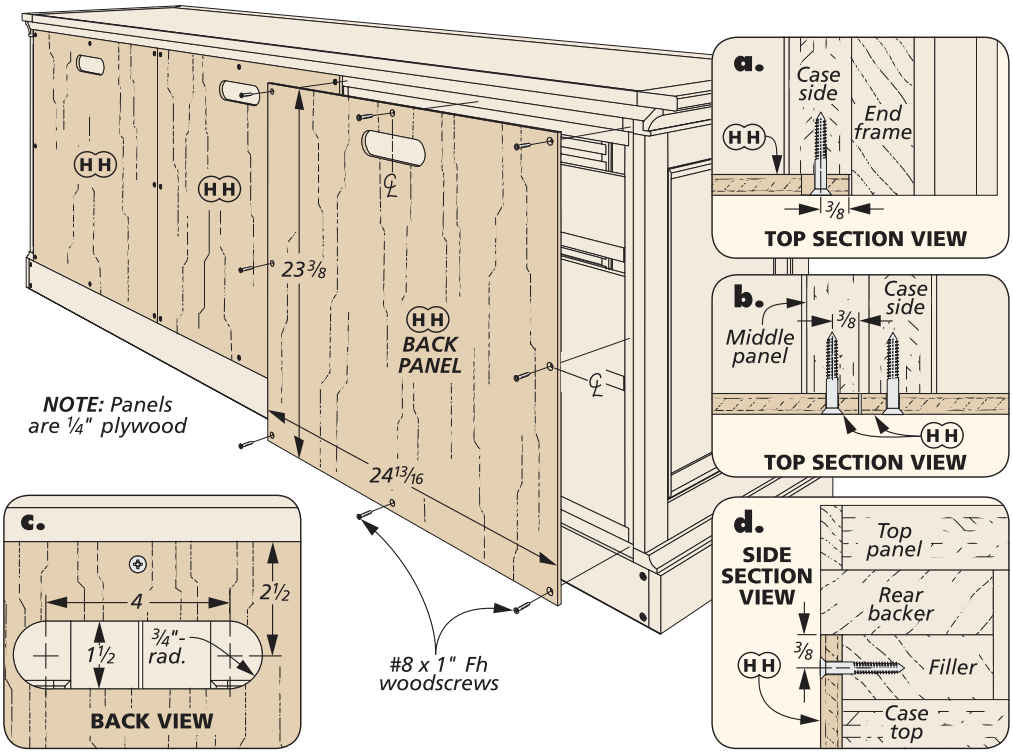

Materials, Supplies & Cutting Diagram

A	Case Tops/Btms. (4)	3/4 ply. - 15 1/2 x 23 3/4
B	Case Sides (4)	3/4 ply. - 15 3/4 x 21 7/8
C	Case Edging	3/4 x 1/4 - 175 rgh.
D	Base Front/Back (2)	3/4 x 3 1/8 - 76 1/2
E	Base Sides (2)	3/4 x 3 1/8 - 15 1/2
F	Base Front Facing (1)	3/4 x 3 1/8 - 78
G	Base Side Facings (2)	3/4 x 3 1/8 - 17 3/4
H	Base Top (1)	3/4 ply. - 15 3/4 x 74 1/2
I	Base Molding	3/4 x 1 1/2 - 120 rgh.
J	Middle Panels (2)	3/4 ply. - 15 3/4 x 21 7/8
K	Case Stiles (4)	3/4 x 1 1/2 - 21 7/8
L	End Frame Front Stiles (2)	3/4 x 1 7/8 - 21 7/8
M	End Frame Rails (4)	3/4 x 2 - 12 3/4
N	End Frame Back Stiles (2)	3/4 x 2 - 21 7/8
O	End Frame Molding	3/4 x 2 - 124 rgh.
P	Top Panel (1)	3/4 ply. - 16 x 75
Q	Top Panel Front Edging (1)	3/4 x 2 1/2 - 80
R	Top Panel Side Edging (2)	3/4 x 2 1/2 - 18 3/4
S	Front Backer (1)	3/4 x 2 5/16 - 77 3/8
T	Side Backers (2)	3/4 x 2 5/16 - 13 1/8
U	Rear Backer (1)	3/4 x 2 - 77 3/8
V	Cove Molding	17/32 x 1 3/4 - 120 rgh.
W	Front Bead Molding (1)	3/4 x 2 - 76 3/4
X	Side Bead Moldings (2)	3/4 x 2 - 17 1/8
Y	Filler (1)	3/4 x 1 3/4 - 72 3/4
Z	Spacers (2)	3/4 x 1 1/2 - 13 1/8
AA	Door Stiles (8)	3/4 x 2 - 21 3/4
BB	Door Rails (8)	3/4 x 2 1/4 - 10
CC	Slats (56)	1/2 x 1 5/8 - 7 3/4
DD	Slat Spacers (8)	3/4 x 3/4 - 20 rgh.
EE	Case Shelves (4)	3/4 ply. - 14 1/2 x 23 1/8
FF	Center Shelves (2)	3/4 ply. - 14 1/2 x 23 3/8.
GG	Shelf Edging	3/4 x 1 - 150 rgh.
HH	Back Panels (3)	1/4 ply. - 24 13/16 x 23 3/8

- (54) #8 x 1 1/4" Fh Woodscrews
- 1" Brads
- (4 pr.) Door Hinges w/Screws
- (4) Door Knobs
- (4) Magnetic Catches
- (24) 1/4" Shelf Supports
- (24) #8 x 1" Fh Woodscrews

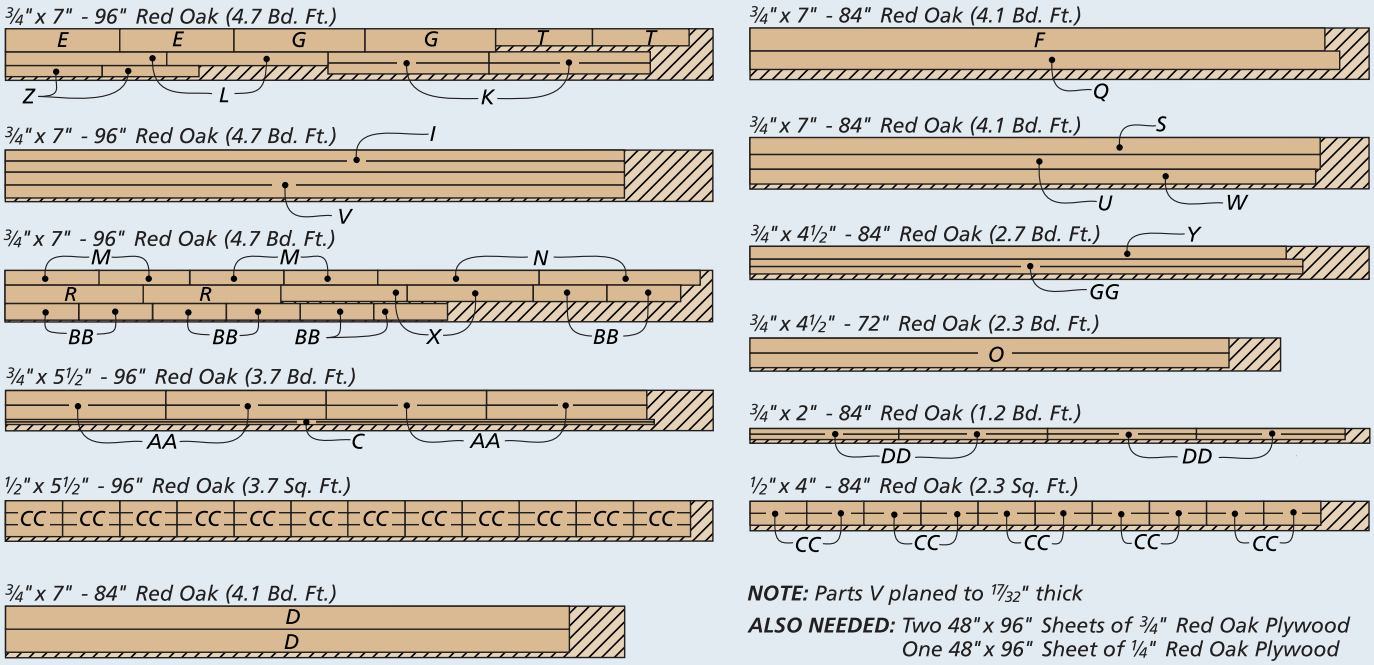

NOTE: *Parts V planed to 17/32" thick*

ALSO NEEDED: *Two 48"x 96" Sheets of 3/4" Red Oak Plywood*
One 48"x 96" Sheet of 1/4" Red Oak Plywood

custom look

Metal Inlay

One of the best parts about woodworking is creating objects that you can't find anywhere else. By adding personalized details, you can turn a good project into a truly unique item. I've been using a technique to do just that — metal inlay. In a nutshell, you simply cut out thin pieces of metal and glue them into matching recesses.

Of course, there's a little more to it. But by working with thin metal sheets (photo below), you can do it all with tools that are pretty familiar. Take a look at the box on the next page to see what you'll need.

CUT THE PATTERN. The process begins with a pattern that you want to inlay into a project part. Print or copy a paper pattern of the design and apply it to the metal sheet with spray adhesive.

In order to support the metal while cutting, I use a board with a V-shaped notch cut in it, as you can see in the photo above. This is clamped to my workbench.

Cut along the lines of the pattern using a small fret saw with a fine metal-cutting blade. Don't be surprised if you break a blade or two as you cut the pieces. These blades are inexpensive so it pays to have a few extra on hand. Install the blade so it cuts on the pull stroke. This draws the workpiece down onto the worksurface.

Making cuts along the perimeter of the pattern is pretty simple. For inside cuts, I drill a starter hole, thread the blade through, and then reinstall it in the saw.

For the most part, the soft metal cuts pretty cleanly. If you find any roughness or burrs on the back side, you can clean them up with a needle file.

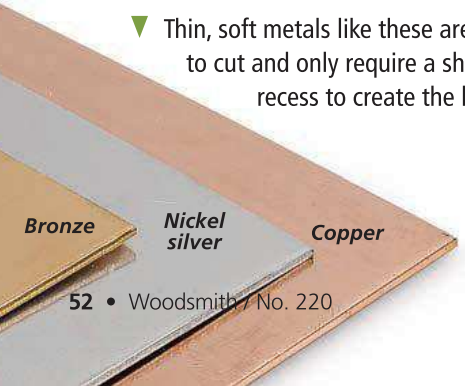

▼ Thin, soft metals like these are easy to cut and only require a shallow recess to create the look.

▲ A couple of drops of thick instant glue will hold the inlay in place as you trace the pattern onto the workpiece.

THE INLAY RECESS

The next step is to create recesses in your project that match the inlay pieces. Start by fixing the metal pieces in place with tiny dots of instant glue. Then trace each inlay piece with a pencil. Angle the pencil to keep the tip of the lead right at the edge of the metal.

You should be able to see the pencil line just fine. But if the wood is dark, you may want to use a white pencil. In either case, keep it sharp for a clear line. On the inside details, I shade the entire opening to make it easier to see.

CARVE THE RECESS. For the task of cutting out the recess, use a small rotary tool (like a *Dremel*) with a router-style base. This gives you much more visibility compared with a typical router — even a small trim router. With a small spiral bit, you can rout with amazing precision.

A piece of metal serves as a gauge to set the bit depth. The recess should be just a hair deeper than the thickness of the metal (drawing above). For the best results, I lowered the speed of the mini router to ¾ of its full speed (25,000 rpm).

Your goal is to rout as close to the lines as possible — without removing them — for a gap-free fit. One more thing: You may want to consider using a magnifying visor for greater visibility. Cut along the lines and then move back and forth across to remove the waste material in between, as shown in the right photo. With such a small bit, this can take a while. So time and patience are the keys to getting good results.

▲ Tinted epoxy anchors the inlay into the recess. You only need a small amount to prevent squeezeout.

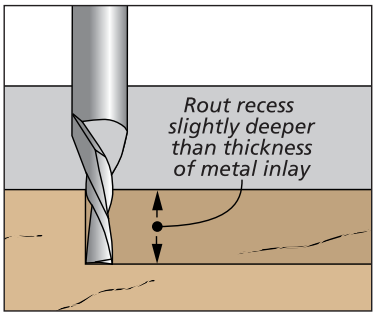

▲ Routing the recess for each metal piece is detailed work. Using a small bit gives you the best control and allows you to work into tight corners.

CHECK THE FIT. When you're finished routing, you can set the inlay in place to check the fit. Like I said, the fit may be pretty snug. So don't force it. Just line it up to see how it matches. If a piece doesn't look like it will go in, I prefer to remove wood with the router over trying to trim the inlay.

GLUING. Ordinary glue won't stick to metal, so I glue the inlay in place with epoxy. The advantage of using epoxy is that it will flow and fill any small gaps that you have. To conceal the gaps even further, I tint the epoxy with a few drops of black liquid dye concentrate, as shown in the lower left photo.

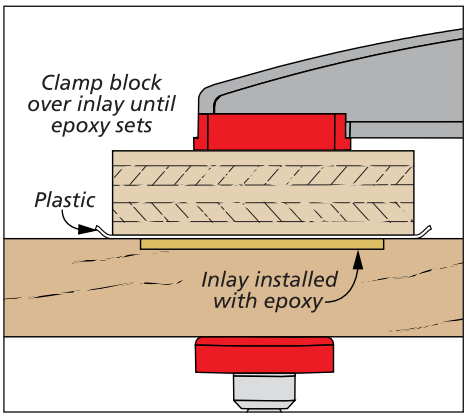

To seat the inlay pieces in the recess, tap them in with a flat block of wood. Once they're installed, lay a sheet of plastic over the inlay and clamp a block over the whole pattern to keep it in place while the epoxy dries, as in the left drawing.

CLEAN UP. Once the epoxy is dry, the workpiece can be sanded so the inlay is perfectly flush with the surface. Sanding dust and metal particles may find their way into the grain of the wood. But you can blow them out with compressed air or draw them out by wiping the surface with denatured alcohol.

In just a few hour's time, the result is a smooth, perfect-fitting inlay. The reward you get for mastering this technique is how much it makes your projects stand out — for all the right reasons. W

What You Need: THE TOOLS

For inlay work, it helps to have down-sized tools to match. You can find sources for these and the metal sheets on page 67.

A rotary tool makes a good mini router. You just need a router-style base to support it. Plus, I find that 1/16" spiral upcut bits are ideal for following layout lines.

For cutting the metal inlay, I use a small, adjustable fret saw with a 2/0 metal-cutting blade.

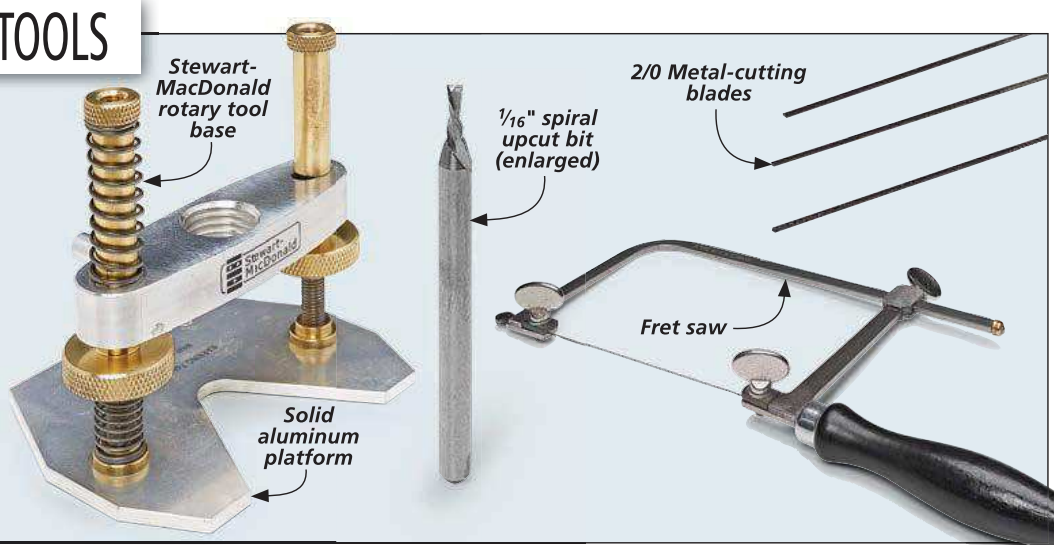

top tips for

Bench Vise Maintenance

A rock-solid workbench is a necessity in a woodworking shop. And no workbench would be complete without a bench vise. A vise is used to clamp workpieces and assemblies for a variety of tasks like sawing, planing, routing, and sanding.

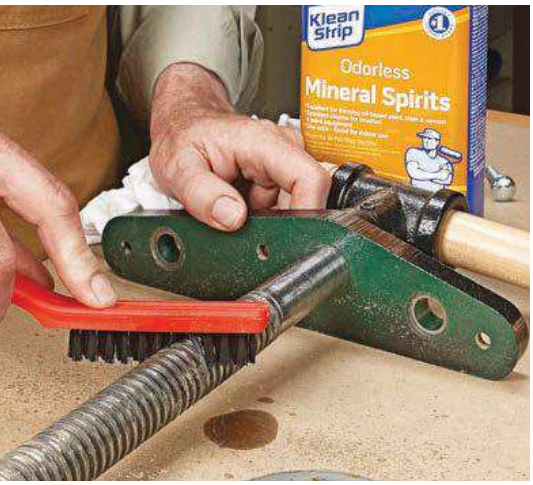

▲ Use a stiff bristle brush and mineral spirits to clean the threads and guide rods of your vise to ensure smooth operation.

Over time, your bench vise might exhibit some signs of needing attention. Perhaps the jaw isn't parallel to the bench. Or turning the handle requires more effort than it should to move the jaw in or out. And sometimes things just work loose, which can cause problems when trying to securely clamp a workpiece. Fortunately, all of these problems are pretty quick and easy to fix.

TWO TYPES OF VISES. When talking about bench vises, they fall into two main categories: A traditional front vise with a large wood jaw (main photo) or a metal bench vise with steel jaws. The mechanics of each type are pretty similar as far as maintenance goes.

Many woodworking benches also include a tail vise. These come in various forms, but many of the tips discussed here will apply to a tail vise, as well.

CLEAN & LUBE. The first step in keeping your vise working smoothly is to clean and lubricate the screw and guide rods. A stiff bristle brush is great for removing dust and debris from the threads, as shown at left. (I removed my vise from the bench for better access, but you may be able to do it with the vise mounted in place.) Follow up with a rag dampened with a solvent like mineral spirits.

While you're at it, give the guide rods a quick inspection. The rods help keep the front jaw parallel to the front of the bench to reduce racking. If you notice any burrs or dings that might interfere with the vise operating smoothly, use a file and fine sandpaper to get everything smooth before applying a lubricant.

To lubricate the threads on the vise screw, I like to use a dry lubricant that doesn't attract dust (upper right photo on next page). After application, the solvents evaporate, leaving a dry, lubricating film. Another good option is to rub a block of paraffin wax across the threads.

JAW ALIGNMENT. Another sign that your vise needs attention is a misaligned jaw.

There are two things to check here: The first is that when you close the jaws, the front jaw should be parallel with the front of the bench or rear jaw. The upper drawing below shows what it looks like when it's misaligned. The second thing to watch for is that the front jaw should toe-in slightly, so that the top edge of the jaw contacts the workpiece first as you tighten the vise (bottom drawing).

To correct a jaw that's not parallel with the bench, first make sure that the screws that secure the vise to the underside of the bench are tight. If you need to tighten them, make any adjustments to realign the front of the undercarriage to the front of the bench at the same time.

To correct the toe-in on the front jaw, there are a couple of options. One way to correct this is to slightly taper the inside face of the jaw. A few swipes with a hand-plane (with the jaw removed) may be all you need. Another option is to use some thin shims between the wood jaw and the metal face of the vise.

BENCH DOG. On metal bench vises, there are a couple of more things to check. The first is the metal bench dog that retracts into the front jaw. Remove it and clean out any debris from the socket. Clean the dog and apply a dry lubricant before reinstalling it. The dog should slide up and down easily.

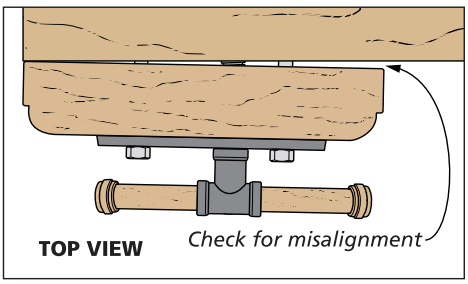

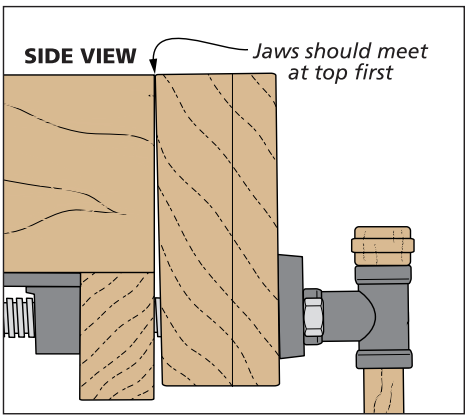

Alignment. Make sure the front jaw is parallel to the edge of the bench, and the top edges of the jaws meet first.

QUICK-ADJUST MECHANISM. The second thing to check is the quick-adjust mechanism, if your vise is equipped with one. It usually consists of a lever beside the handle that releases a half-nut on the threaded rod to enable the vise to slide in and out without turning the handle, as shown in the photo below. A little cleaning and lubrication will ensure smooth operation.

LOOSE HARDWARE. Because a bench vise typically sees a lot of heavy use, it's not uncommon for some of the hardware to work loose. So I periodically give the vise a once-over to tighten all the fasteners. I've already talked about the screws that secure the vise to the bench (lower right photo). But don't forget the screws used to fasten the jaw on a front vise or auxiliary wood jaw on a steel vise. On a front vise, check that the large nuts that secure the guide rods are tight. And there are also screws that secure bushings for the guide rods on the rear jaw or bench apron. All of these should be retightened as necessary.

STRIPPED HOLES. What if the screw holes are stripped and the screws simply don't hold tight? There's an easy fix for that. I drill out the hole and glue in a plug made with a plug cutter. After trimming the plug flush, redrill the pilot hole for the screw. The plug will be hidden by the vise hardware.

REASSMBLE. Once you've cleaned and lubricated the hardware and checked all of the screws for tightness, you can put everything back together and remount the vise to your bench if needed.

▲ If your vise has a quick-adjust feature, make sure to clean the threads on the half-nut as well as the vise screw.

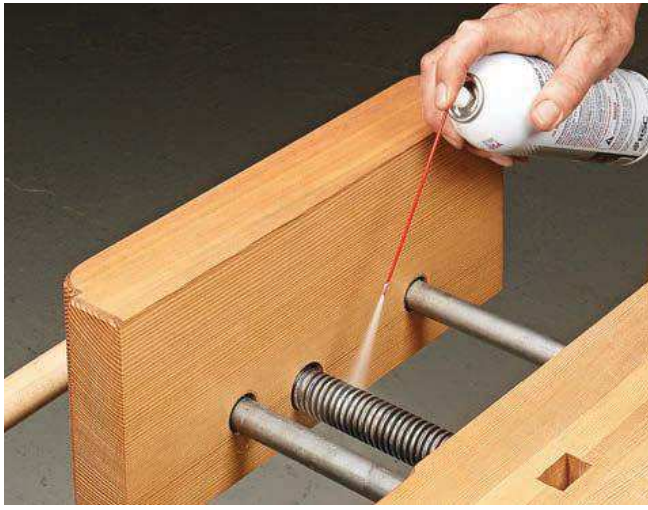

▲ A dry spray lubricant or block of paraffin is all you need to lubricate the threads on your bench vise. Wipe a little lubricant on the guide rods while you're at it.

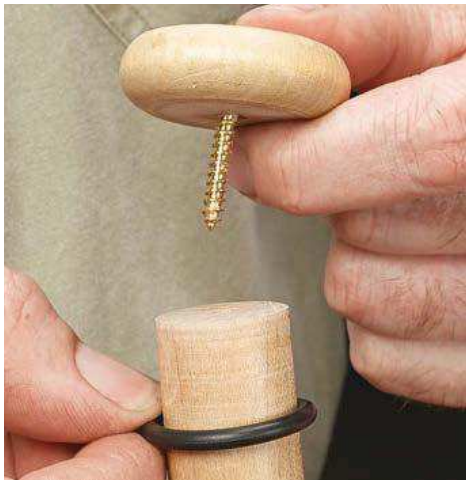

▲ A rubber O-ring slipped over the end of the vise handle cushions the end caps to help protect them during use.

HANDLE. The last thing to inspect is the vise handle. Check to make sure the end caps are secure. They take a beating when the handle drops into the socket. To help absorb the shock, install rubber O-rings on the handle (photo above.)

Your bench vise is a critical tool in the woodworking shop.With a little care and attention, it will operate like new. W

▲ Periodically checking to make sure all of the vise hardware is tight is an important step in keeping your vise working like new.

our editor's Sharpening Solutions

There are few topics in woodworking that inspire the kind of passion that sharpening does. Get a group of woodworkers talking about sharpening technique and equipment and you're sure to have a spirited discussion on your hands.

The reality is that there are a number of methods to get razor-sharp edges on your tools. Choosing any approach includes considerations that go beyond results. Many of these are personal and subjective.

With that in mind, I took an informal survey of the sharpening setups of some of the woodworkers around the shop here at *Woodsmith*. What they had to say may help you develop a sharpening system that works well in your shop.

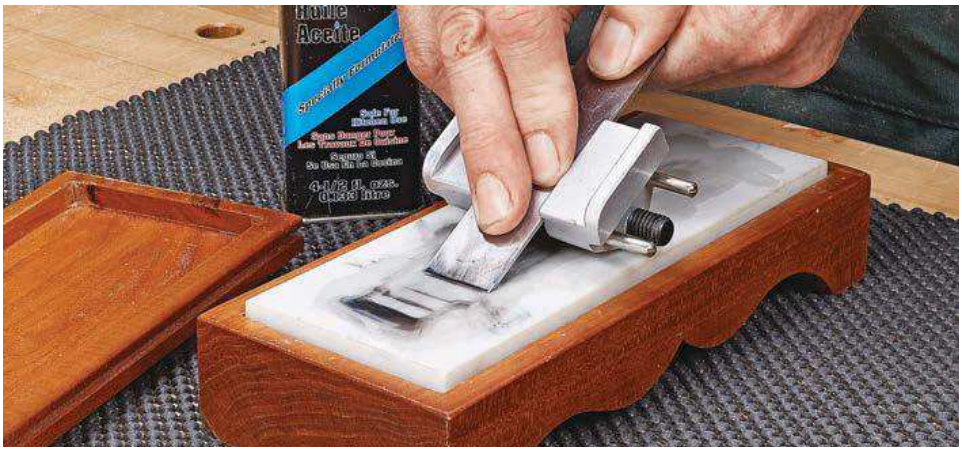

▲ A transluscent, hard Arkansas oilstone is used to put a fine polish on tools. A few drops of light oil keep the stone from clogging with metal particles, which slows down the cutting action. Oilstones are hard wearing so they don't require frequent flattening.

WATER & OILSTONES

Rubbing a tool on the surface of an abrasive stone is the first image that comes to mind when thinking about sharpening. Most of the day-to-day maintenance of keeping tools sharp involves touching up edges like you see in the photos above. Two common and traditional choices for this are waterstones and oilstones.

WATERSTONES. For someone like Ted Kralicek, our Design Director, waterstones are the way to go. The reason? Speed. "Waterstones cut quickly so I can touch up an edge and get back to my project in just a few minutes," Ted says.

He uses a combination waterstone, as shown in the main photo above.

The 1000-grit side renews the cutting edge while the finer, 6000-grit side brings it back to razor sharpness.

The aggressive cutting action of waterstones allows them to work well on the harder steel found in the Japanese chisels that Ted uses, as well as his other tools. Even some hard, modern steel alloys are easier to sharpen using waterstones.

OILSTONES. Ease of use is the reason Phil Huber, Senior Editor, uses oilstones, as shown in the lower right photo on the previous page. All it takes is a few drops of oil and he's ready to go. A pair of oilstones take care of his chisels, carving tools, and plane irons.

To establish the bevel, he uses a medium India stone. A translucent, hard Arkansas stone provides the keen edge. For the ultimate edge on chisel, carving tools, and smoothing plane irons, he uses a leather strop. The box below has the details on how this works.

The main advantage of oilstones for Phil is that they're hard wearing. This means they rarely need to be flattened (unlike waterstones). This is an especially nice feature for sharpening carving tools and narrow chisels that can wear a gouge in softer waterstones.

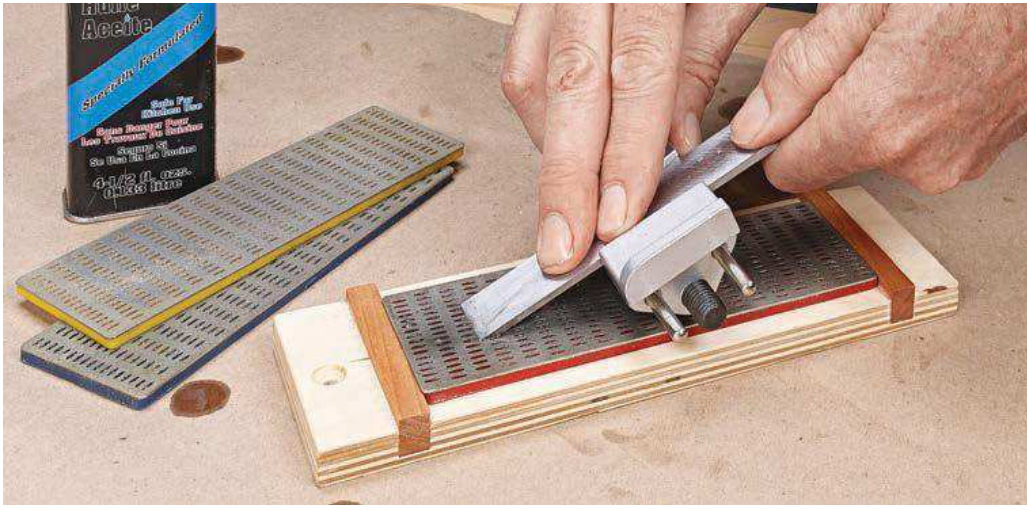

▲ Fast-cutting diamond stones can save you time sharpening hand tools. These stones have a perforated pattern so that the swarf created by sharpening won't clog the stones. Stones are color coded to identify the grit of the diamond abrasive.

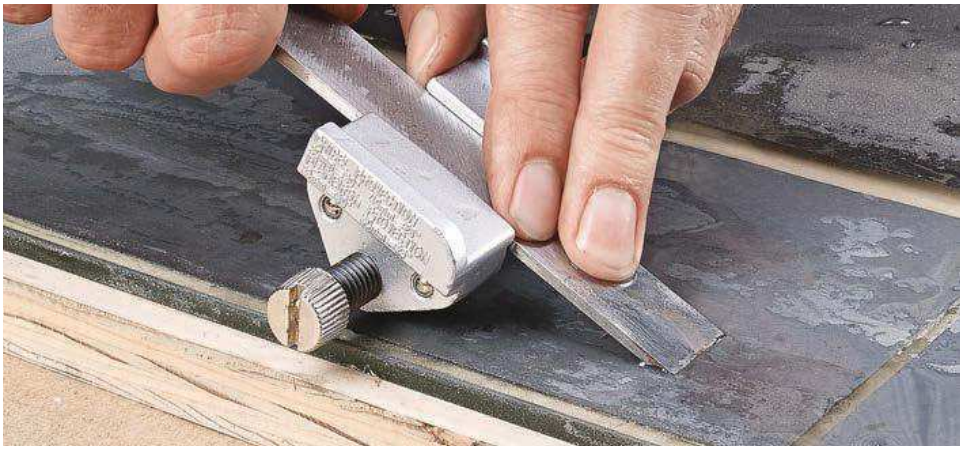

▲ Wet/dry silicon carbide sandpaper makes quick work of sharpening the even hardest steel alloys found on woodworking tools. You can attach several grits to a large piece of glass to create an all-in-one sharpening station.

How-To: STROPPING

For the sharpest edge, you need the back and bevel as smooth as possible. One traditional way to do that is to use a strop. A leather strop, along with honing compound, polishes the steel and helps to remove the wire edge created when sharpening.

While some woodworkers use bare leather, I find that using a fine-grade honing compound cuts faster and creates a mirror-like surface on your fine tools.

▲ To create a high polish on your tools, drag the tool back across the strop. Alternate passes between the bevel and the back of the tool.

DIAMOND STONES

Traditional sharpening stones aren't your only options for getting a keen edge. In recent years, a couple alternatives have become popular. One of those uses industrial diamonds as the abrasive medium.

"Waterstones cut fast but dish out quickly. Oilstones are harder but they cut much slower. Diamond stones combine the best of both," according to Randy Maxey, Senior Editor.

The "stones" in this case are composed of industrial diamonds bonded to thin steel plates, which are attached to composite blocks, as shown in the upper right photo. They can be used dry, or with water or oil as a cutting agent. Randy's set of stones (coarse, fine, and extra-fine) let him grind away nicks and chips and then establish the cutting edge. Like Phil, he uses a strop for the final touch.

SANDPAPER ON GLASS

If you don't do a lot of sharpening, the initial cost of other sharpening methods can be difficult to justify. That's the case for Bob Zimmerman, Senior Graphic Designer. Instead, he uses sheets of wet-or-dry sandpaper that's applied to a glass plate with spray adhesive, as shown in the upper left photo.

With this arrangement, you use several grits of sandpaper. This spreads out the wear and lets you sharpen tools to match your needs. Individual sheets don't cost much, so the investment is low.

When the sandpaper wears down, you simply remove it and apply another piece. There's no flattening necessary.

▲ You have a number of wheel options when setting up a bench grinder to meet the needs of your shop tools.

Power Sharpening

There's more to sharpening than basic edge maintenance. When you need to remove nicks or reshape a bevel, power sharpening tools can save time and improve the results you achieve. Beyond just heavy work, some tools are all-in-one systems that tackle everything from grinding new bevels to honing the final edge. In my conversations, three tools were mentioned that highlight the range of capabilities that are available.

▲ The main advantage of a bench grinder is that it spins at a fairly quick rate (1750 or 3450 rpm). That means you can remove a lot of material in a short time. For woodworking tools, a coarse, friable wheel breaks down to prevent overheating.

BENCH GRINDER

A bench grinder is the traditional machine for many woodworkers. It's a simple setup for tackling a wide range of tasks.

THE RIGHT SETUP. "I love my bench grinder. I use it for initial grinding and shaping of edge tools like chisels and plane irons," says Vince Ancona, Managing Editor. In addition to those basic tasks, he uses a grinder for sharpening turning tools and drill bits along with metalworking.

The type of bench grinder Vince likes is a high-speed (3450 rpm) grinder. Choosing the right wheels is a key ingredient in getting reliable results.

On one side of the grinder, he has a coarse, 60-grit aluminum oxide wheel. It's designed to wear quickly to expose fresh abrasive and prevent the tool from overheating. This wheel works great for plane irons, chisels, and other edge tools. Of course, it's a good idea to keep a cup of water close at hand to cool the tool from time to time, as in the photo above.

He has a gray 60-grit silicon carbide wheel on the other side that he uses for sharpening high-speed steel drill bits and other metalworking tasks.

TOOL RESTS. For Vince, another element of getting the most from a bench grinder is having the right tool rest. He upgraded his grinder with aftermarket tool rests that are better suited to his needs. The box on the next page has more details.

WORK SHARP

A grinder excels at removing a lot of material quickly. For the final, polished edge, you still need to head back to the stones.

▲ There are two ways to use the *Work Sharp*. Use the top to flatten tool backs or coarse grind with the universal tool rest. An angled ramp on the side lets you create a specific bevel angle for chisels and plane irons (inset photo).

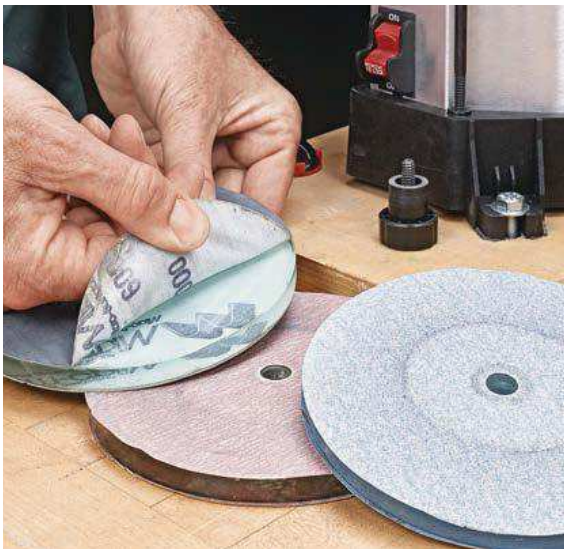

▲ Adhesive-backed sandpaper is applied to glass discs to create the sharpening surface. It's easy to apply a grit to each face to get double duty from each disc.

Or you could try a sharpening machine that can do it all. After feeling frustrated by his results with traditional sharpening stones and even the sandpaper method, Gene Pedersen, E-Commerce Art Director, picked up a *Work Sharp WS3000*.

The *Work Sharp* doesn't use abrasive wheels (photos on previous page). Instead, the machine spins glass discs that are covered with adhesive-backed sandpaper. With a range of grits (80-3600), you're set up to handle everything from coarse grinding to honing. A leather-covered wheel works as a power strop.

Unlike a conventional grinder, the *Work Sharp* spins at 580 rpm. Gene found that makes it less intimidating to use and far less likely to overheat a tool, ruining its temper. That doesn't mean it's slow. Gene can put a keen edge on his chisels and plane irons in just a few minutes.

▲ The *Tormek* uses two wheels to sharpen all kinds of tools. A stone wheel spins in a water bath. This helps to keep the stone from clogging and cools the tool being sharpened at the same time. The leather wheel on the opposite end (inset) strops the edge to a mirror shine.

TORMEK

If the *Work Sharp* can be compared to a power version of sandpaper sharpening, then the *Tormek* is a powered-up waterstone. As you can see in the upper photos, it has a large-diameter wheel that spins through a water bath.

DUAL-GRADE WHEEL. The grinding wheel on the *Tormek* can be dressed to act like a coarse grinding wheel to remove metal in a hurry. For finer sharpening, you redress the stone to work like a fine-grit waterstone, creating a mirror polish.

One the other end of the machine, there's a leather-covered wheel to strop edges to a high degree of sharpness.

What attracted Bob Kemp, Assistant Editor, to the *Tormek* was its versatility. After getting a lathe, he needed a way to sharpen his turning tools. After trying out the *Tormek* in the shop at work, he was hooked. Now it's his go-to method for all his other woodworking tools, as well.

TOOL HOLDERS. An important part of what makes the *Tormek* so versatile and easy to master is that you can get specialty jigs for all kinds of tools (photo at right) including household scissors and knives.

Choosing an approach to sharpening doesn't need to be intimidating. My advice is to consider what's important for your needs and put a method into use.

Sharpening is a skill that's honed, so to speak, by practice. So don't expect one technique to be a silver bullet. You can boost your chances of success by taking the time to master it. The results are sharper tools and better woodworking. W

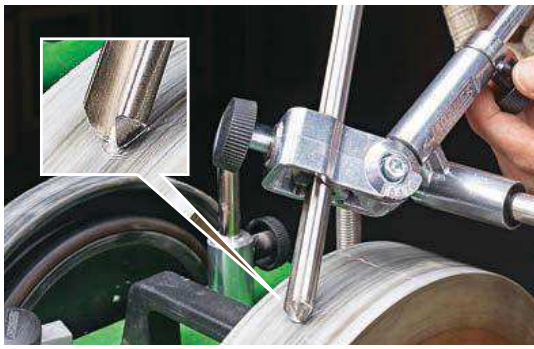

▲ Add-on specialty jigs let you put a perfect edge on hard-to-sharpen tools like turning gouges and carving tools.

Upgrades: TOOL RESTS

Replacing the stock tool rest is a sure-fire way to improve the performance of your bench grinder. Here are two good options to consider. (For sources, turn to page 67.)

VERITAS TOOL REST. The *Veritas* tool rest provides a large support surface. And it's easy to adjust the angle and elevation to suit your needs. A groove in the table accepts jigs for even more accuracy.

WOLVERINE. Sharpening turning tools can be a challenge. The *Wolverine* grinding jig helps to simplify the process. It cradles the handle of the tool so you can concentrate on getting a consistent grind at the business end.

▲ The *Veritas* tool rest is a good all-around upgrade for a bench grinder. It's easy to adjust and works with any grinder.

▲ The *Wolverine* specializes in holding turning tools for consistent grinding every time.

the basics of Edging Plywood

Any time you build a project out of plywood, chances are that some form of hardwood edging will be involved. It's the perfect way to hide the plywood layers and give the project the illusion of being built entirely from solid wood. But good results require more than just cutting strips and gluing them on.

CHOOSING YOUR EDGING. There are a lot of ways to edge plywood. You can use everything from iron-on veneer edge-banding to ornate moldings. But in my shop, the edging I use the most often is also the simplest: Basic wood strips that match the panels they'll go on.

Even these basic strips give you several options. If I'm edging shelves, for example, I'll often make the strips a little thicker to beef them up, as in the photo above. You can also make the edging wider than the panel and extend below the bottom face to give a shelf the illusion of being thicker. Other times, I simply want to hide the edge of the plywood, such as at the front of a cabinet. I'll cut thinner strips for these situations.

When I'm building a project with plywood and hardwood edging, there's a little more involved than just choosing boards and panels from the same species of wood. Remember, the goal with edging is to make it virtually disappear in the finished project. So taking some time to make sure the color and grain of the parts match nicely makes a big difference in the final appearance of the project.

RIPPING THIN STRIPS. Before you can edge your plywood parts, of course, you need to plane some blanks to thickness and

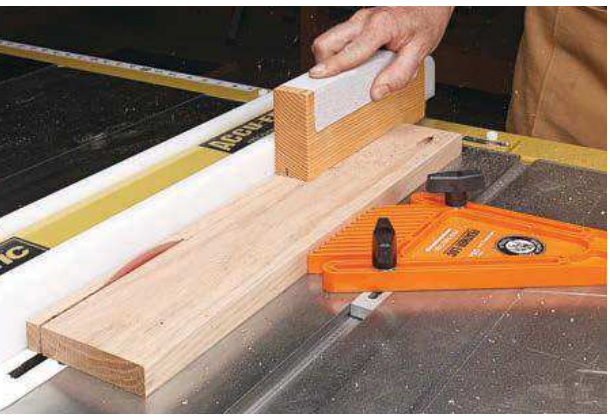

▲ A notched 2x4 push block is the simple solution for ripping edging strips. It keeps your fingers safe as you pass the block right over the blade.

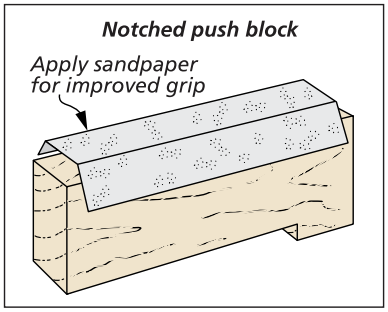

then rip strips to width at the table saw. This usually requires setting the rip fence quite close to the blade, which presents some safety issues when cutting. Fortunately, the solution isn't a difficult one.

My preferred method is a notched 2x4 push block (refer to the photo and drawing on the bottom of the previous page). The block provides solid support and keeps your fingers safely away from the blade as you cut. As you push the workpiece through, you simply cut into the block. A bit of adhesive-backed sandpaper on the block improves the grip.

APPLYING THE EDGING. The next steps involve gluing and clamping the edging to the plywood. Here, getting the faces of the strips perfectly flush with the faces of the plywood can sometimes be a bit tricky. To avoid this problem, I intentionally leave my strips a bit wider than the thickness of the plywood (about ⅛"). Then, I can go back and trim the edging flush to match the panel.

My simple setup for trimming the edging is shown in the photo and drawing at right. It's just an auxiliary router table fence with a rabbet at the bottom that allows the edging to fit underneath it. It also has a notch for the bit.

The auxiliary fence is attached to the router table fence with double-sided tape, and the bearing of the router bit is aligned with the face of the fence. All you do is slide the plywood along the fence to trim the edging in one quick pass.

There are other methods for trimming the edging flush with the face of a panel, as well. For example, you can leave the edging just a hair wider than the plywood, and then clean it up with a sanding block or a block plane. Just take care not to damage the veneer of the plywood as you trim the edging.

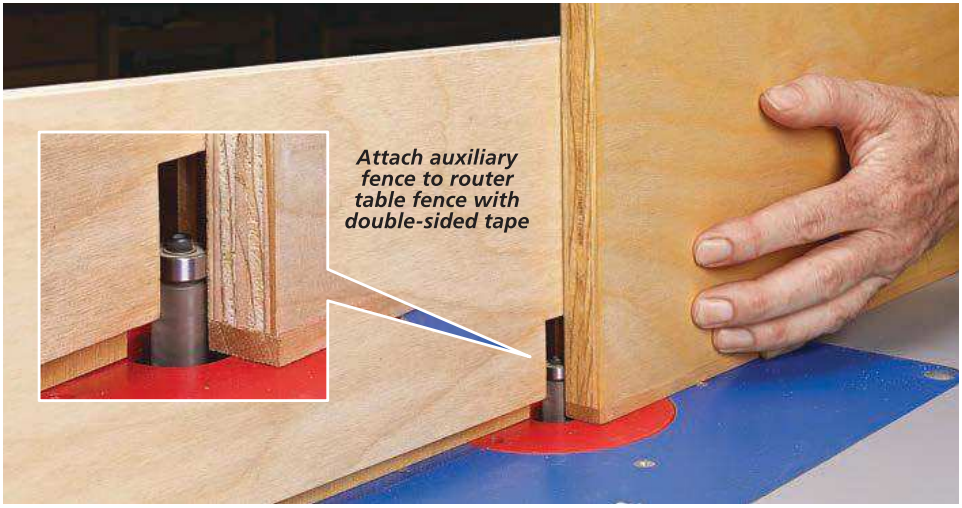

▲ To create edging that's flush with plywood panels, leave it a bit wide and then trim it at the router table. This auxiliary fence has a rabbet at the bottom that lets the extra-wide edging pass through. The bearing of the flush-trim bit aligns with the face of the fence.

ALTERNATIVE CLAMPING OPTIONS. As long as the edging strips are about ¼" thick, I find that clamps are sufficient for applying pressure when gluing edging to panels (main photo, opposite page). But there are situations where standard clamping methods won't work. For example, some projects call for applying edging to a cabinet after it's already assembled.

In these situations, I take a little bit different approach. First, I start with edging strips that are the same width as my panel thickness. Then I use a clamping method that allows me to apply the strips more easily to the plywood. You don't need a large amount of clamping pressure here — just enough to hold the strips in place while the glue sets up. In fact, I've found that tape or shims both work great for clamping thin edging strips to cabinets. There are also edging clamps available that are designed specifically for this operation (refer to the photos below).

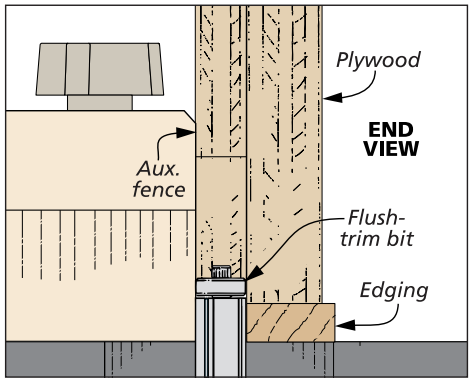

Edging plywood parts with hardwood strips is one of the most basic techniques in woodworking. But paying close attention to the details when doing so helps create edging that blends in seamlessly, which ultimately leads to better-looking projects. W

How-To: CLAMPING OPTIONS

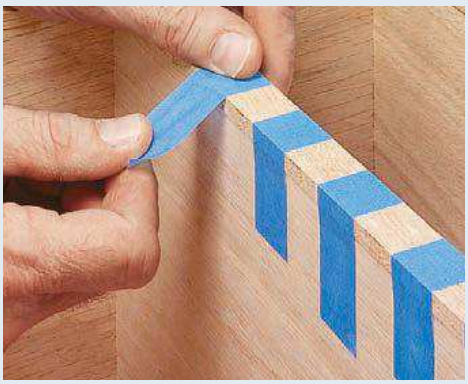

▲ Strips of painter's tape can hold the edging tight while the glue dries. It's a great solution where your clamps won't reach.

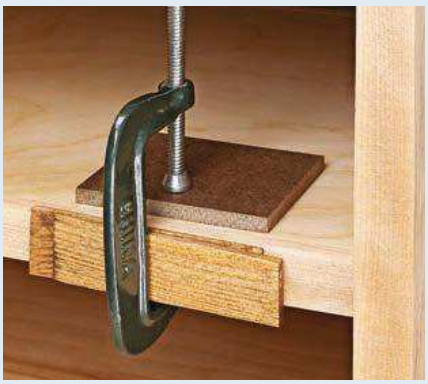

▲ For added pressure, apply small C-clamps to the panel, and drive in shims to hold the edging tight.

▲ These new *Bandy Clamps* from *Rockler* are handy tools for applying edging to plywood (refer to Sources, page 67).

low-tech Setup Tips

Before making a series of cuts on the table saw, it's always a good idea to make sure it's set up accurately. But you don't need elaborate, expensive gauges or digital doo-dads to accomplish this. Here are some simple, low-tech ways to get accurate results with your table saw.

MITER GAUGE SETUP

After ripping boards to width, I use my table saw for crosscutting parts to length. For precise joinery, those cuts need to be dead square. And that means the miter gauge has to be set square to the blade.

I learned a long time ago not to rely on the angle markings on the miter gauge. They'll get you close, but you still need to verify the angle before making a cut.

TEST CUTS. Here's an easy, foolproof method I use for checking that the miter gauge is square to the blade. First, find a wide scrap piece with smooth, parallel edges. Cut a piece off one end at least a couple inches long (lower left photo). Now flip the cutoff to the opposite edge and stand the two pieces up on your saw table (inset photo). If you see a gap between the two pieces, you'll need to tweak the angle of the miter gauge. Repeat the process until there's no gap between the cut pieces.

BLADE SETUP

I've sometimes cut parts for an assembly only to realize that my cuts weren't square. When it came time to assemble the joints, it was obvious something was wrong. After a little head-scratching, I figured out that the blade on the table saw wasn't set exactly to 90°. It was close, but off just enough to cause problems.

It's easy to check the blade with a square, and that's my first step. But sometimes it's hard to tell if the square is touching the blade all along its length.

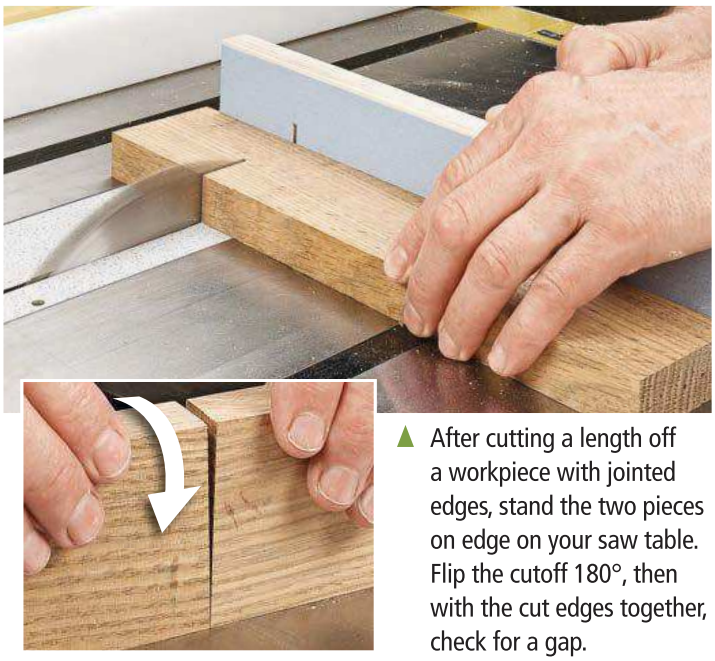

After cutting a length off a workpiece with jointed edges, stand the two pieces on edge on your saw table. Flip the cutoff 180°, then with the cut edges together, check for a gap.

To check that the blade is square, raise the blade and use a thick workpiece. Rotate the cutoff as before and place the cut ends together. Adjust the blade angle until there's no gap.

EASY TECHNIQUE. I found a foolproof way to check the squareness of the blade by making a test cut similar to the process I talked about for checking the miter gauge. This is shown in the lower right photos on the previous page.

Instead of using a wide workpiece, I use a thick one. This provides more surface area to make it easier to gauge the true angle of the blade after making a cut. As before, make a cut and flip the cut-off 180°, placing the cut ends together to check for a gap. When there's a tight fit, you know the blade is perfectly square.

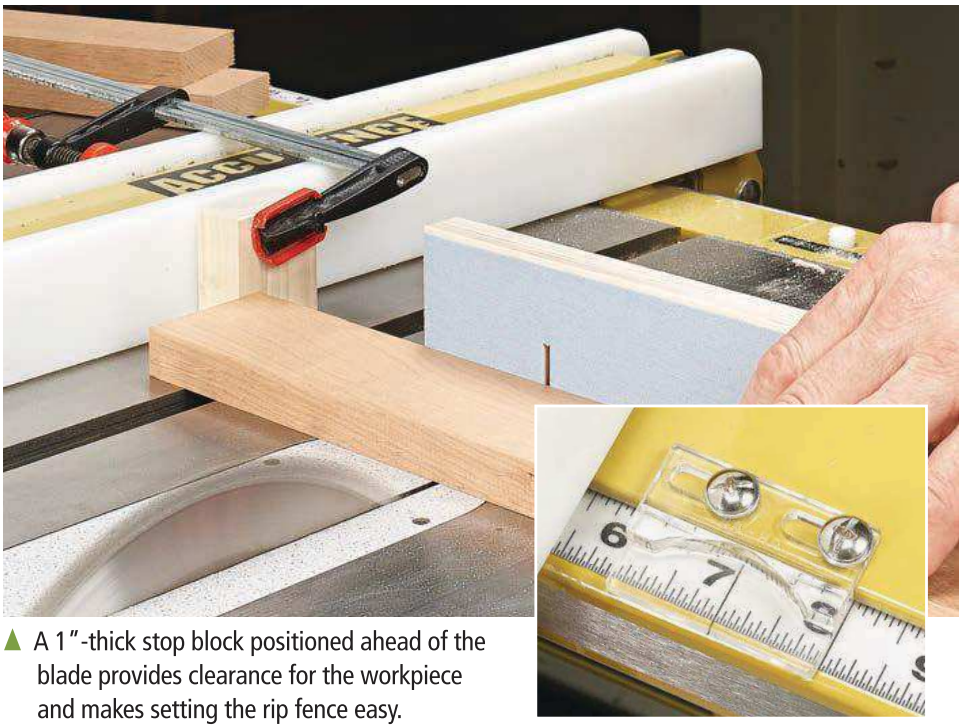

▲ A 1"-thick stop block positioned ahead of the blade provides clearance for the workpiece and makes setting the rip fence easy.

ACCURATE, REPETITIVE CUTS

When multiple parts need to be the same length, there's another low-tech method I use for guaranteed accuracy. And that's the use of a stop block clamped to the rip fence ahead of the blade.

The stop block provides clearance for the workpiece and prevents it from binding between the blade and rip fence. I often chose a scrap piece of ¾" material that was close at hand, but this meant that I couldn't use the scale on my rip fence to set up for the cut.

SIMPLE MATH. To get around adding fractions in my head or using a ruler, I switched to using a stop block that is exactly 1" thick. This makes it easy to use the scale and cursor on the rip fence to quickly set the desired length of the workpieces. All you need to do is add 1" to the length and set your rip fence to that dimension. The photos on the right show how this works. In this example, setting my rip fence to 7" on the scale yields workpieces that are 6" in length, as you can see in the inset photo above. This simplifies the math to make the setup quick and easy.

DEAD-ON MITERS

Setting the angle of the miter gauge to cut miters can be a trial-and-error process. Again, the angle markings aren't usually that accurate on stock miter gauges. To quickly home in on a starting point, I like to use a plastic triangle to set the angle (main photo, previous page).

BEEFY TRIANGLES. I used to use drafting triangles, but I've switched to using a set of *Woodworker's Triangles* from *Rockler*. They cost more, but they're thicker and more robust for use in the shop.

Ideally when using a triangle against the saw blade, you'll want to place the edge against the saw plate and not the teeth. This makes it easier to register the triangle. If this isn't possible, at least make sure it contacts a tooth at the front and back of the blade.

SIMPLICITY. Though there are a lot of fancy devices available to help with saw setup, the simple tools and techniques shown here will get the job done just as accurately. The box below shows a couple of my other favorite setup tools. W

Favorite: LOW-TECH TOOLS

▲ The *Veritas Blade Gauge* is made from thick steel to help it stand on edge for checking blade angles. The ends are ground to a fine edge for accurate registration against the blade.

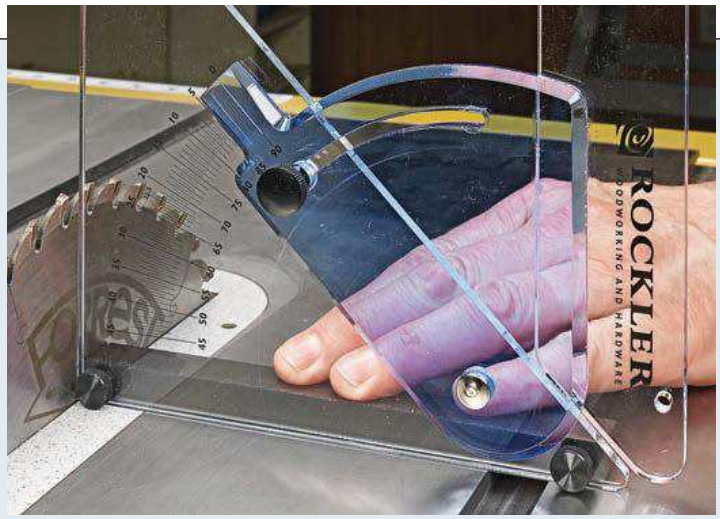

▲ The *Rockler Woodworker's Adjustable Triangle* has ultra-fine angle markings and a cursor to allow you to accurately set up and check angles. The removable fence makes it handy for layout work, too.

tips from our shop

router jig for Turning Rollers

The upper roller on the belt sander (page 30) presented a bit of a challenge. Since the blanks are predrilled before glueup, getting the roller blank centered on the lathe to turn it round would have been difficult. Instead, I used the simple router jig you see here. It serves two functions: It turns the blank round plus slightly tapers each end to create a crown.

SIMPLE CONSTRUCTION. The drawings below show you how to construct the jig out of plywood. The rough roller blank is fitted with the bearings and shaft that feeds through the ends of the jig. This assembly is held in place with a stop collar at each end. There shouldn't be any side-to-side play, and the roller blank should spin freely.

TURNING IT ROUND. The first step in shaping the roller is to trim off the waste to create a smooth, round cylinder. I used a core box bit in the router table to accomplish this. (A straight bit has a tendency to catch on the blank as you spin it in the jig.) The box below shows the basic technique. Slowly rotate the blank as you feed the jig into the bit.

CREATING A CROWN. Once the bulk of the waste is removed, create a slight taper on each end. This is easy to do by placing shims under one end of the jig, as shown below. You may need to raise the bit to remove 1/16" of material at the end of the roller blank. As you move the jig into the bit, it will remove less material until it quits cutting about midway through the blank. Then move the shims to the other end of the jig and rotate the jig 180° to repeat the process.

After tapering the roller, remove it from the jig and give it a light sanding to remove bit marks.

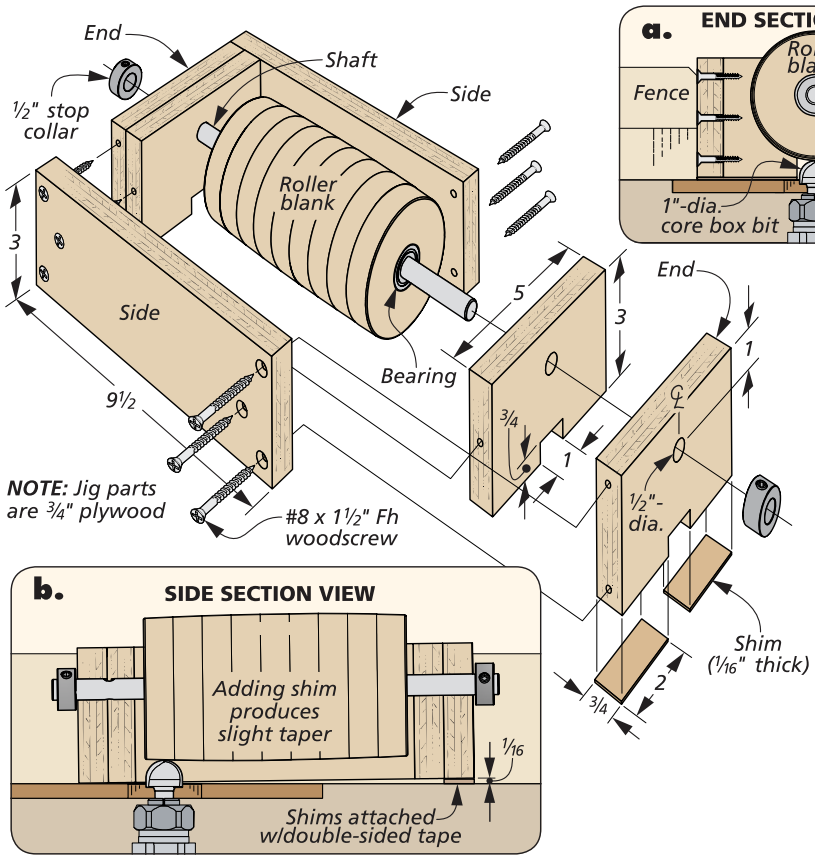

How-To: USE THE ROLLER JIG

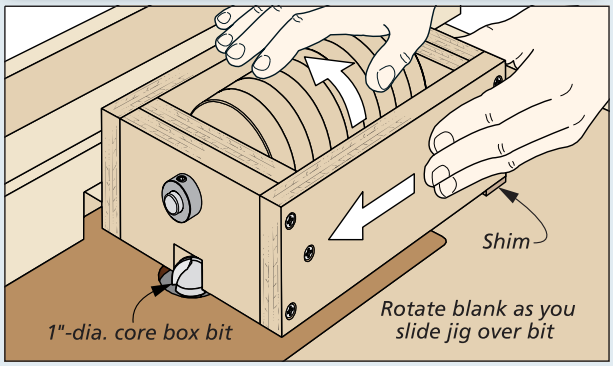

Tapering the Roller. After turning the roller blank round, taper each end slightly by raising the bit and placing shims under the back edge of the jig.

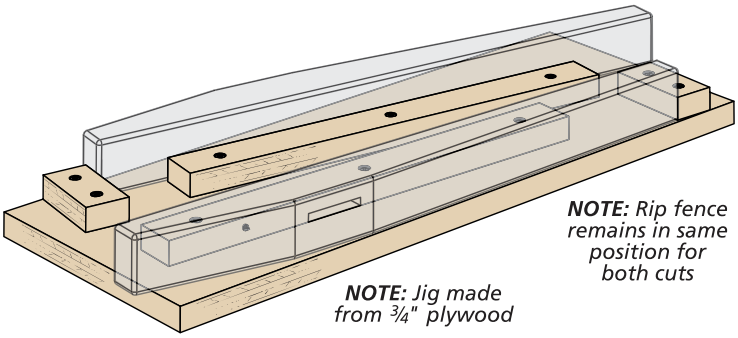

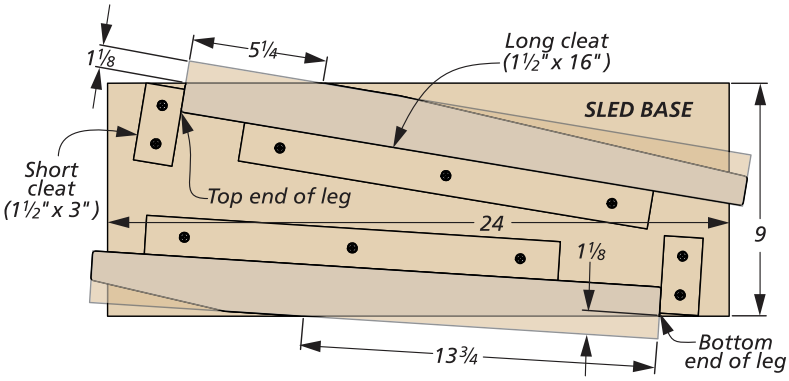

Dual Taper Jig

Each leg of the footboard bench (page 24) has a pair of tapers on their inside face. One slopes toward the top of the leg while the other slopes toward the bottom. Since I don't own a commercial taper jig for my table saw, I decided to make the one shown here. This jig allows me to make the long taper at the bottom of each leg. I can then simply turn the jig around and reposition the leg blank to cut the short taper at the top of each leg.

LAYOUT WORK. Using the dimensions shown in detail 'a' on page 26, mark the layout lines for both tapers on one leg blank. This blank will be used to position the support cleats on the face of the sled.

SET UP THE JIG. Now line up the layout line for the long taper with one edge of the base (main drawing, above) and fasten the cleats in place with a few screws. Flip the workpiece to the other side of the sled and repeat the process for the short taper.

MAKE THE CUTS. With a rip blade installed in the table saw, set the rip fence for the width of the base and cut the long taper on a leg blank, as shown in Figure 1. Spin the jig around and reposition the leg blank to make the short taper cut (Figure 2). I used double-sided tape to hold the blanks in place while cutting.

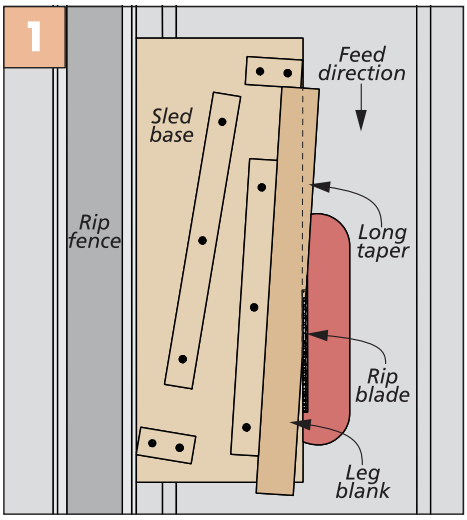

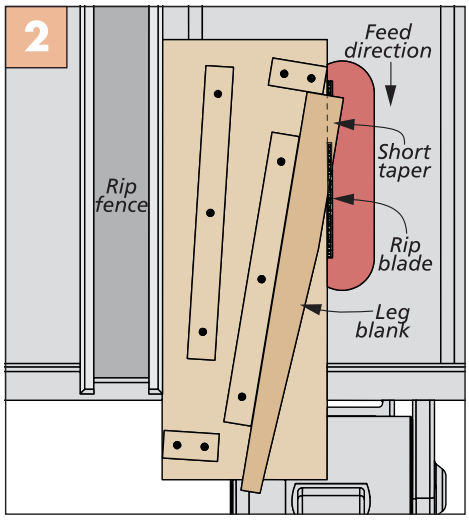

Bevel-Cutting Jig

The slats of the TV console's doors (page 48) require bevels on both edges. In the past, I've gotten poor and inaccurate results when beveling small parts with the table saw blade tilted, so I came up with a different solution this time.

SIMPLE JIG. The secret is a jig that holds the slats at an angle as you cut them. A saddle lets the jig straddle the rip fence, and a bevel block on the front fence positions the slat at the correct angle. A keeper and push stop let you hold the slats securely as you cut. You'll flip the slats edge for edge and reset the rip fence between cuts, as shown in Figures 1 and 2.

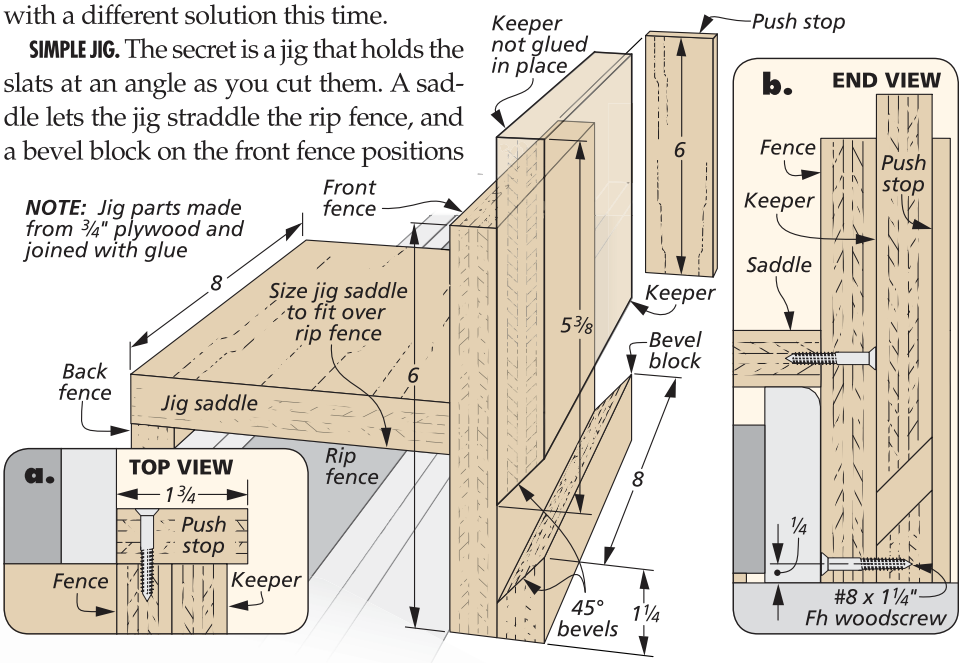

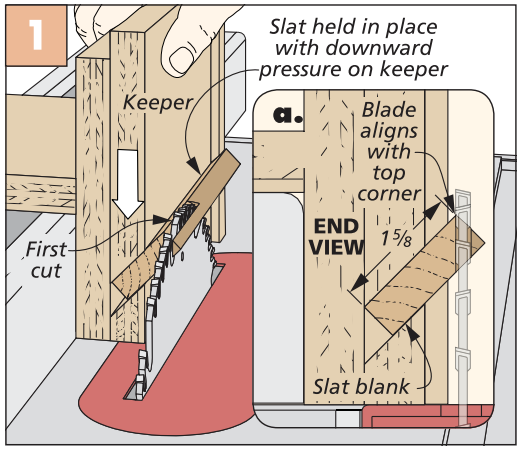

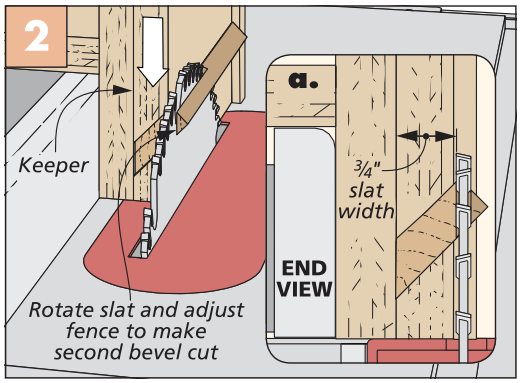

Angled Notch-Cutting Jig

The TV console's louvers are made by capturing slats in long, narrow strips called slat spacers. And these strips need evenly spaced, angled notches on both the right-hand and left-hand sides in order to hold the louvers correctly.

BOX JOINTS WITH A TWIST. The solution was to make jigs that were similar to box joint jigs, but rotated at a 45° angle, as you can see at right. And you'll need two jigs — one to cut the angled notches in the left-hand slat spacers, and a mirror-image jig for the right-hand spacers.

Fortunately, neither jig is difficult to make. They're just L-shaped assemblies that get mounted to the miter gauge. A small, hardwood key is used to establish the spacing between each notch. I started by cutting the notch for the key in the fence (Figure 1). Then I assembled the jig, and used a ⅜" spacer to establish the spacing between the key and dado blade (Figure 2) as I mounted the jig to the miter gauge. After that, cutting notches in the extra-long slat spacer blanks is almost automatic. Figure 3 provides the details.

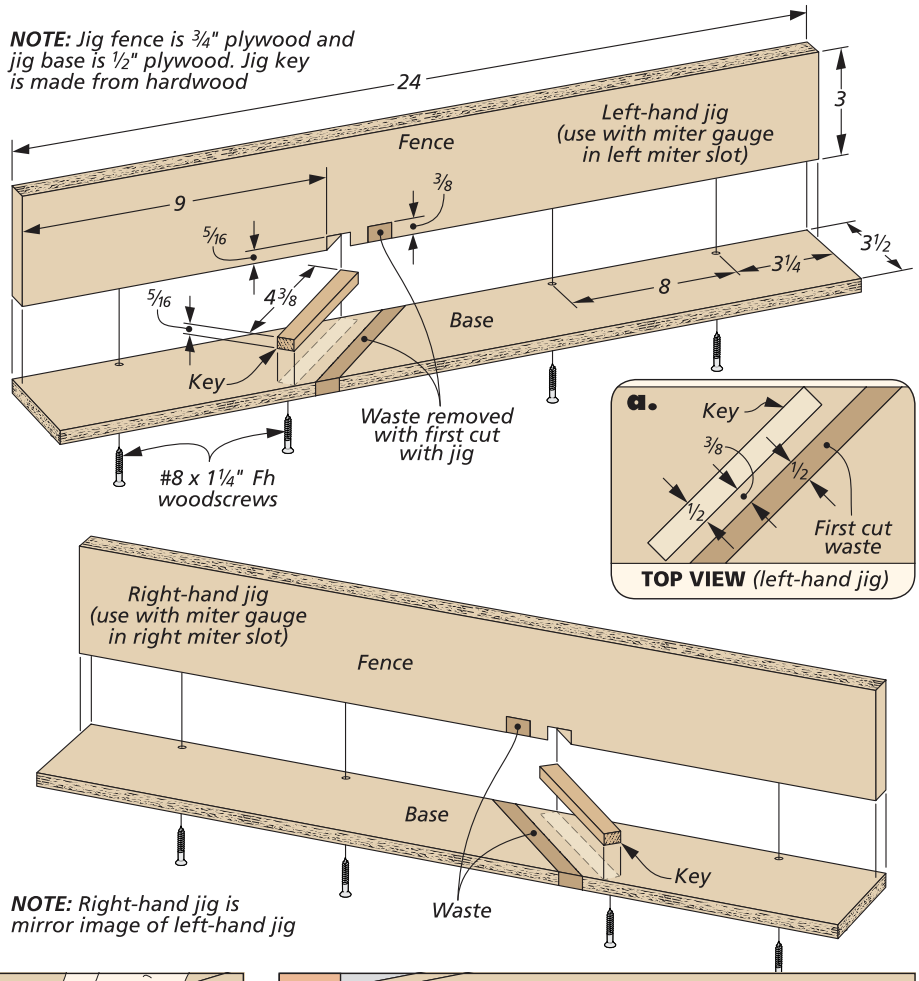

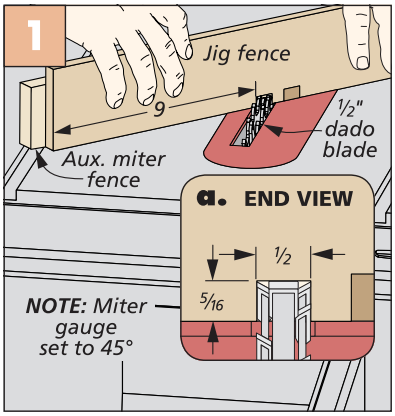

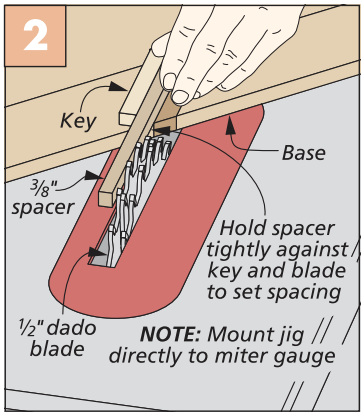

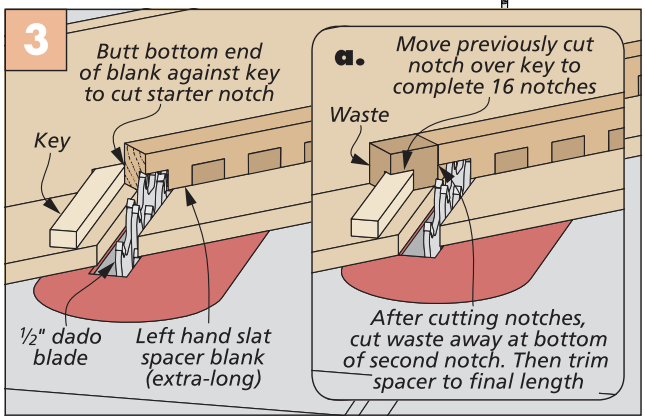

Miter-Trimming Guide

The door frames of the TV console are joined with mortises and tenons. But the rails and stiles have a beaded profile on the inside edges that mate up with miter joints. The easiest way to trim these small miters was with a sharp chisel. I just needed a guide to keep the chisel at 45° as I cut.

SIMPLE GUIDE. As you can see in the drawings at right, the solution is straightforward. It's just a scrap piece of hardwood with a wide rabbet to fit over the rails and stiles, and 45° ends to guide the chisel. Figures 1 and 2 show how you can use the guide to trim the miters on both the stiles and rails. You'll make the two cuts differently, as you can see in the drawings. W

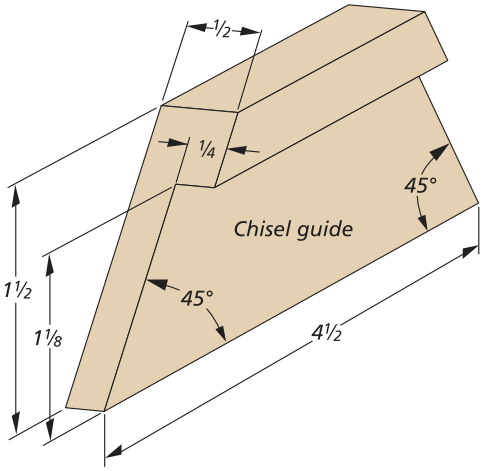

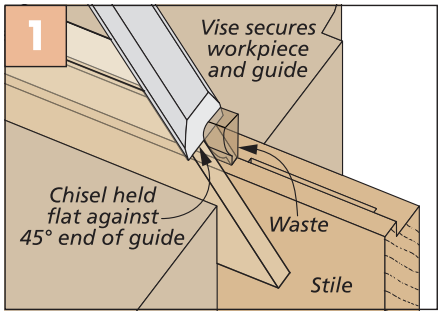

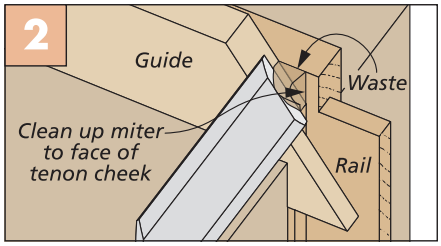

hardware & supplies
Sources

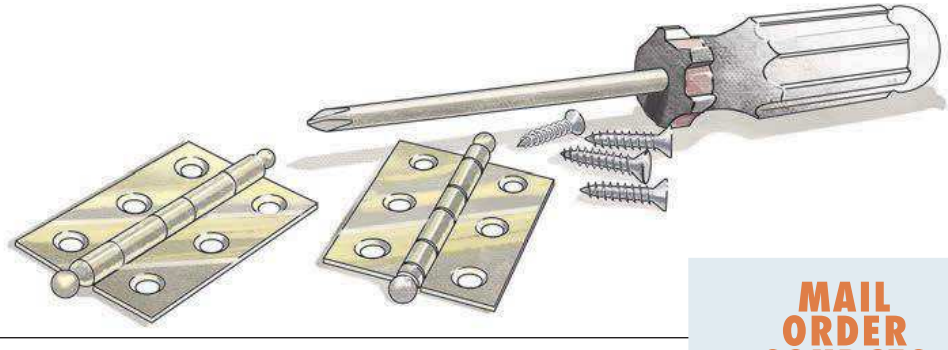

Most of the materials and supplies you'll need to build the projects are available at hardware stores or home centers. For specific products or hard-to-find items, take a look at the sources listed here. You'll find each part number listed by the company name. See the right margin for contact information.

ROUTERS *(p.12)*

You can find fixed-base routers wherever tools are sold or online at *amazon.com*. *Ryobi* and *Ridgid* routers are available from *Home Depot*. The *Ryobi* router doesn't come with a T-handle wrench, but you can order one from *amazon.com*, part no. 513667001.

AIR HOSE REELS *(p.14)*

- **Amazon**
  - *Legacy Reel* B007QV1K28
  - *RoboReel* B00LCOQNRC

You can also purchase the *RoboReel Air Hose Reel* system and accessories directly from the manufacturer, *Great Stuff, Inc.* Additionally, a full line of *Coxreels* are available at *coxreels.com*. The new line of air hose reels from *Coxreels* are painted blue.

INLAID BOX *(p.16 & 52)*

- **Rio Grande**
  - *Copper Sheet* 132116
  - *Bronze Sheet* 134550
- **Stewart-MacDonald**
  - *Precision Router Base*. 5260
  - *1/16" bit*. 5152
- **Tools for Working Wood**
  - *5" Fret Saw*. . . .MS-FRETSAW.05
  - *2/0 Blades* MS-FRETM.20DZ

For the pattern shown in the article, I used bronze for the oak leaves and copper for the acorn. The box was stained with *Minwax*'s *English Chestnut*. After that, two coats of spray lacquer provide protection.

BENCHTOP BENCH *(p.20)*

- **Home Depot**
  - *HeadLok Screws* 341511

FOOTBOARD BENCH *(p.24)*

- **Improvements**
  - *Chenille Tufted Cushion*. . 485853

Our cushion is *Sand*, but there are several other colors available. The bench was stained with a mixture of three parts *Zar* cherry stain and one part *Wood Kote Jel'd* stain (cherry). Then it was sprayed with two coats of lacquer.

LATHE BELT SANDER *(p.30)*

- **McMaster-Carr**
  - *Compression Springs* . .9657K467
  - *1/2"-I.D. Shaft Collars*. . . 6432K16
  - *Ball Bearings*. 6384K49
  - *Studded Knob* 62215K54
  - *Cast Iron Knob* 6042K73
  - *7/8"-dia. Knob* 6044K63
  - *1/2"-dia. Shaft* 1555T14
  - *3/8" x 3/4" Steel Bar* 8910K388
- **Rockler**
  - *Magnetic Catches* 26559
- **Rust-Oleum**
  - *Hammered Gray Paint* . . 7214830
- **Nevamar**
  - *Laminate ("Raven")* S6033

TV CONSOLE *(p.40)*

- **Horton Brasses**
  - *1 1/4"-dia. Knobs*. K-12-1.25
  - *1 1/2" x 2 1/2" Hinges*. PB-409B
- **Lee Valley**
  - *1/4" Shelf Supports* 05H20.41
  - *Panel Magnet Cups* . . . 99K32.72
  - *3/8" Magnets* 99K32.03
  - *1/2" Magnet Washers* . . 99K32.62
  - *1/2" Magnet Discs*. 99K34.51
- **Eagle America**
  - *Crown Molding Bit* 130-2815
  - *1/8"-rad. Beading Bit*. . . .P14-3307

The console was stained with two coats of *Minwax*'s *Slate* water-based stain. The first coat was allowed to dry, and the second coat was wiped on more aggressively. Then a coat of *General Finishes' Glazed Effects* in *Van Dyke Brown* was brushed on and wiped off. Excess glaze was intentionally left in some of the corners and profiled moldings to highlight those areas. Once it dried, two coats of lacquer were applied.

SHARPENING SOLUTIONS *(p.56)*

You can find a wide variety of sharpening supplies from most woodworking retailers.

- **Rockler**
  - *Work Sharp 3000* 25384
  - *Wolverine Jig*. 24707
  - *Tormek T-7* 35254
- **Lee Valley**
  - *Veritas Tool Rest* 05M23.01

EDGING PLYWOOD *(p.60)*

- **Rockler**
  - *Bandy Clamps* 54258

TABLE SAW ACCESSORIES *(p.62)*

- **Rockler**
  - *Woodworker's Triangle*. 33486
  - *Adjustable Triangle*. 31712
- **Lee Valley**
  - *Veritas Blade Gauge* . . . 05N75.01

Get the all-new *Woodsmith* Magazine Library DVD! It contains every page of our first 216 issues. The DVD is fully searchable and printer-friendly. Plus, you get online access to every issue, as well. Learn more at *Woodsmith.com*!

Magazine Library DVD: $99

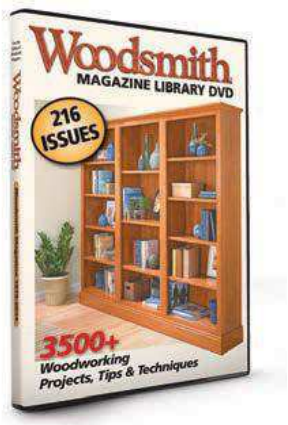

MAIL ORDER SOURCES

Project supplies may be ordered from the following companies:

Woodsmith Store
800-444-7527

Rockler
800-279-4441
rockler.com

amazon.com

Coxreels
800-269-7335
coxreels.com

Eagle America
800-872-2511
eagleamerica.com

General Finishes
800-783-6050
generalfinishes.com

Great Stuff, Inc.
888-478-7883
roboreel.com

Home Depot
800-466-3337
homedepot.com

Horton Brasses
800-754-9127
horton-brasses.com

Improvements
800-634-9484
improvementscatalog.com

Lee Valley
800-871-8158
leevalley.com

McMaster-Carr
630-833-0300
mcmaster.com

Minwax
800-523-9299
minwax.com

Nevamar
877-726-6526
nevamar.com

Rio Grande
800-545-6566
riogrande.com

Rust-Oleum
800-901-0411
rustoleum.com

Stewart-MacDonald
800-848-2273
stewmac.com

Tools for Working Wood
800-426-4613
toolsforworkingwood.com

looking inside
Final Details

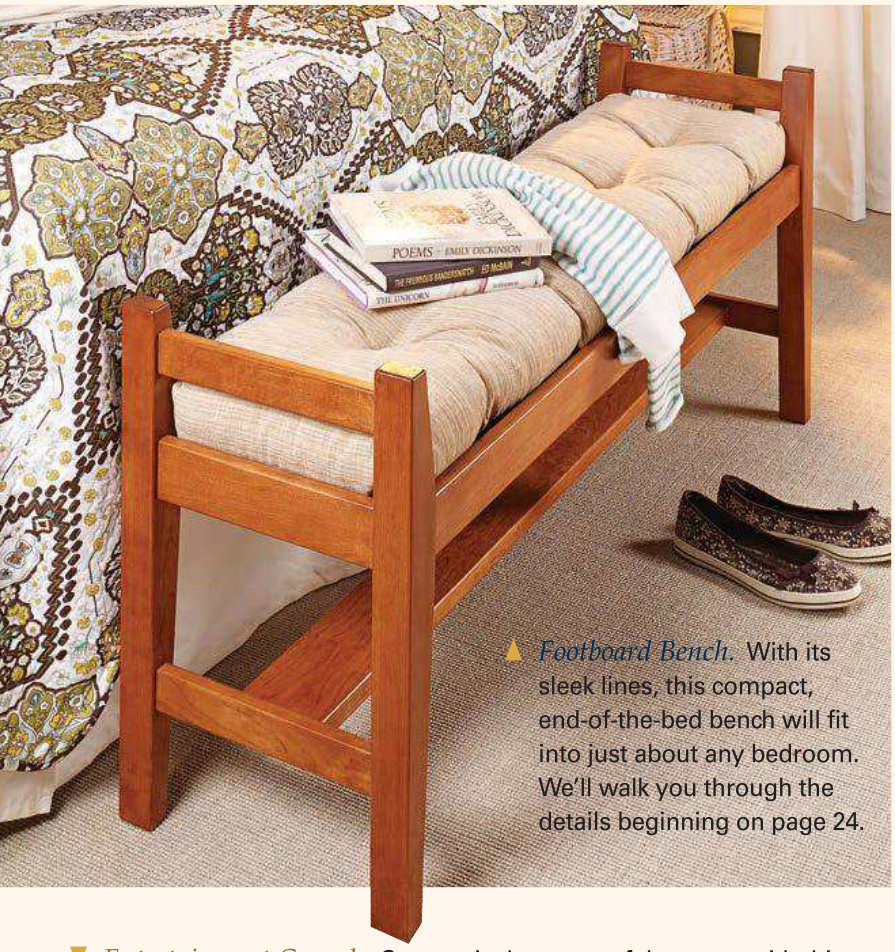

▲ *Footboard Bench.* With its sleek lines, this compact, end-of-the-bed bench will fit into just about any bedroom. We'll walk you through the details beginning on page 24.

▲ *Lathe Belt Sander.* Get double duty out of your lathe by building this belt sander attachment. It mounts directly to the bed and is driven by the headstock of the lathe. Plans begin on page 30.

▲ *Metal Inlay Box.* Try your hand at a new technique with this handsome keepsake box. The lid features a metal inlay you can make in the shop. Turn to page 16 to learn how it's done.

▼ *Entertainment Console.* Storage is the name of the game with this large TV console. Louvered doors at each end of the console keep the contents out of sight. Step-by-step instructions start on page 40.